DESIGNERS' GUIDES TO THE EUROCODES

DESIGNERS' GUIDE TO EUROCODE 7: GEOTECHNICAL DESIGN

DESIGNERS' GUIDE TO EN 1997-1 EUROCODE 7: GEOTECHNICAL DESIGN – GENERAL RULES

R. FRANK, C. BAUDUIN, R. DRISCOLL, M. KAVVADAS,
N. KREBS OVESEN, T. ORR and B. SCHUPPENER

Series editor
H. Gulvanessian

thomas telford

eurocodes expert

Published by ICE Publishing, One Great George Street, Westminster, London SW1P 3AA.

Full details of ICE Publishing sales representatives and distributors can be found at:
www.icevirtuallibrary.com/info/printbooksales

First published 2005
Reprinted 2009, 2013

Eurocodes Expert

Structural Eurocodes offer the opportunity of harmonized design standards for the European construction market and the rest of the world. To achieve this, the construction industry needs to become acquainted with the Eurocodes so that the maximum advantage can be taken of these opportunities

Eurocodes Expert is a new ICE and Thomas Telford initiative set up to assist in creating a greater awareness of the impact and implementation of the Eurocodes within the UK construction industry

Eurocodes Expert provides a range of products and services to aid and support the transition to Eurocodes. For comprehensive and useful information on the adoption of the Eurocodes and their implementation process please visit our website or email eurocodes@thomastelford.com

A catalogue record for this book is available from the British Library

ISBN: 978-0-7277-3154-8

Typeset by Helius, Brighton and Rochester
Printed and bound in Great Britain by CPI Group (UK) Ltd, Croydon CR0 4YY

Preface

EN 1997-1, *Eurocode 7: Geotechnical Design*, Part 1: *General Rules*, is the document in the Eurocode suite concerned with the general geotechnical aspects of the design of structures. It applies the principles of EN 1990, *Eurocode: Basis of Structural Design*, by setting the rules for determining the geotechnical actions and for checking the acceptability of the geotechnical resistances.

Aims and objectives of this guide

The principal aim of this guide is to provide guidance on the use and interpretation of EN 1997-1.

Eurocode 7 assumes that the user has an adequate knowledge and understanding of soil mechanics and geotechnical engineering. The reader of this guide is also expected to be a geotechnical engineer or to be familiar with conventional geotechnical design.

Throughout this guide emphasis is placed on everyday practice, avoiding complicated geotechnical design cases, in order to ease the understanding of the new concepts and rules for geotechnical design appearing in EN 1997-1. Comment is made only on material in EN 1997-1 that is felt to differ from traditional practice.

For many aspects, this guide aims to be a self-sufficient document but, as the clauses of EN 1997-1 are repeated only when strictly necessary, the reader should read the guide in conjunction with the code itself.

Layout of this guide

EN 1997-1 has a Foreword and 12 sections together with nine annexes; this guide has the same structure, with the chapters corresponding to the sections in the code. *Annex A* of EN 1997-1 gives the partial factors and their recommended values for checking ultimate limit states in persistent and transient situations. All the other annexes of EN 1997-1 relate to a specific section, and are thus dealt with in the corresponding chapters of this guide.

Each chapter of the guide follows the order of its corresponding section of EN 1997-1 unless this is found to be unhelpful for providing guidance on the use and interpretation of EN 1997-1 (this is particularly the case for Section 6 and, to some extent, for Section 8). Consequently, the section numbering in this guide does not necessarily match that in EN 1997-1: the correspondence between the numbering is indicated in the contents list beginning each chapter in this guide.

Worked examples are given for the determination of characteristic values (Chapter 2), for spread foundations (Chapter 6), for pile foundations (Chapter 7), for anchorages (Chapter

8), for retaining structures (Chapter 9) and for overall stability (Chapter 11). These examples are intended to highlight issues relevant to the application of EN 1997-1.

All cross-references in this guide to sections, clauses, subclauses, paragraphs, annexes, figures, tables and expressions of EN 1997-1-1 are in *italic type*, which is also used where text from EN 1997-1-1 has been directly reproduced (conversely, quotations from other sources, including other Eurocodes, and cross-references to sections, etc., of this guide, are in roman type). Expressions repeated from EN 1997-1-1 retain their numbering; other expressions have numbers prefixed by D (for Designers' Guide), e.g. equation (D2.1) in Chapter 2. **Bold type** is used for textual emphasis.

Acknowledgements

This book would not have been possible without the successful completion of Eurocode 7 – Part 1. Those involved in this process included:

- the project team for converting ENV 1997-1 into EN 1997-1
- the working group for converting ENV 1997-1 into EN 1997-1
- the project team for ENV 1997-1 (1994)
- the chairman and members of the *ad hoc* group of the European Commission, who in 1978 drafted the first model code for Eurocode 7.

The important contributions of the following in the development of Eurocode 7 – Part 1 are also acknowledged:

- the national geotechnical societies of the EC countries (who are members of the International Society for Soil Mechanics and Geotechnical Engineering, ISSMGE) for their support, especially in the early years of the development of Eurocode 7
- national delegations to CEN/TC 250/SC7, and their national technical contacts, for their valuable and constructive comments
- members of the project team for EN 1990, *Eurocode: Basis of Structural Design*, for their contributions to the clauses in EN 1997-1 relating to soil–structure interaction.

This guide is dedicated by its authors to their colleagues mentioned above. The authors also wish to thank:

- Their wives, Vassilia Frank, Bénédicte Bauduin, Liz Driscoll, Kitty Kavvadas, Hanne Krebs Ovesen, Diane Orr and Jutta Schuppener, for their support and patience.
- Their employers, CERMES (ENPC-LCPC), Paris; BESIX, Brussels; BRE, Garston; NTUA, Athens; GEO-Danish Geotechnical Institute, Lyngby; Trinity College, Dublin; and BAW, Karlsruhe.

R. Frank
C. Bauduin
R. Driscoll
M. Kavvadas
N. Krebs Ovesen
T. Orr
B. Schuppener

Contents

CHAPTER 1

General

This chapter is concerned with the general aspects of EN 1997-1. The structure of the chapter follows that of *Section 1*:

1.1. Scope

1.1.1. Scope of Eurocode 7 – Part 1

EN 1997-1 gives the general principles and requirements, as well as the general application rules, relevant to the geotechnical aspects of the design of buildings and civil engineering works. It has to be used in conjunction with EN 1990, *Eurocode: Basis of Structural Design*, which is the head document in the Eurocode suite and thus establishes, for all the structural Eurocodes, the principles and requirements for safety, serviceability and durability of structures; it further describes the basis of design and verification and provides guidelines for related aspects of structural reliability. *Clause 1.1.1(2)* *Clause 1.1.2(1)* *Clause 1.1.1(1)*

EN 1990 gives, in particular, the rules for calculating the combinations of the actions on buildings and civil engineering works. The numerical values of the structural actions are given in EN 1991, *Eurocode 1: Actions on Structures*, and in the corresponding National Annex for a particular country. *Clause 1.1.1(4)*

The provisions for the design of a structure in a particular material (e.g. concrete or steel), specifically its strength and resistance, are the subject of the 'material' Eurocodes (Eurocodes 2 to 6 and 9). Eurocode 7 (on geotechnical design) and Eurocode 8 (on earthquake resistance) are relevant to all types of structures, whatever the construction material.

EN 1997-1 describes the requirements for geotechnical design, in order to ensure safety (strength and stability), serviceability and durability of supported structures, i.e. of buildings and civil engineering works, founded on soil and rock. In particular, it deals with the calculation of geotechnical actions, of their effects on structures and of geotechnical resistances. *Clause 1.1.1(3)* *Clause 1.1.1(4)*

For geotechnical design under seismic conditions, the design rules of EN 1997-1 should be complemented by the rules of EN 1998-5, *Eurocode 8 – Part 5: Design of Structures for Earthquake Resistance. Foundations, Retaining Structures and Geotechnical Aspects*. *Clause 1.1.1(7)*

1.1.2. Designs not fully covered by Eurocode 7 – Part 1

As already noted in the Foreword to this guide, Eurocode 7 can also serve as a reference document for the geotechnical aspects of dams and tunnels, of slope stabilization, and of foundations for special construction works (e.g. nuclear power plants); additional provisions to those provided by EN 1997-1 will probably be necessary (see clause 1.1(2) in EN 1990 and *clause 2.1(21)* in EN 1997-1).

Clause 2.1(21)

1.1.3. Contents and organization of Eurocode 7 – Part 1

Clause 1.1.2(2)

The subjects covered in the different sections of EN 1997-1 are as follows:

- *Section 1*: general
- *Section 2*: basis of geotechnical design
- *Section 3*: geotechnical data
- *Section 4*: supervision of construction, monitoring and maintenance
- *Section 5*: fill, dewatering, ground improvement and reinforcement
- *Section 6*: spread foundations
- *Section 7*: pile foundations
- *Section 8*: anchorages
- *Section 9*: retaining structures
- *Section 10*: hydraulic failure
- *Section 11*: site stability
- *Section 12*: embankments.

The sections of EN 1997-1 can be described as follows:

- *Section 1* gives the general assumptions and definitions, the symbols, etc.
- *Sections 2, 3, 4, 10* and *11* are applicable to all types of geotechnical structures.
- *Sections 6, 7* and *9* are specific to particular categories of geotechnical works (shallow or spread foundations, deep or pile foundations and retaining structures, respectively).
- *Section 8* on anchorages is intended to be used for the design of temporary and permanent anchorages used to support retaining structures, to stabilize slopes, cuts or tunnels, and to resist uplift forces on structures.
- *Sections 5* and *12* cover geotechnical works of a more general nature.

The chapters in this guide and their contents correspond to the sections of Eurocode 7.

Clause 1.1.2(3)

The following annexes are included in EN 1997-1:

- *Annex A* (normative): partial and correlation factors for ultimate limit states and recommended values
- *Annex B* (informative): background information on partial factors for Design Approaches 1, 2 and 3
- *Annex C* (informative): sample procedures to determine limit values of earth pressures on vertical walls
- *Annex D* (informative): a sample analytical method for bearing resistance calculation
- *Annex E* (informative): a sample semi-empirical method for bearing resistance estimation
- *Annex F* (informative): sample methods for settlement evaluation
- *Annex G* (informative): a sample method for deriving presumed bearing resistance for spread foundations on rock
- *Annex H* (informative): limiting values of structural deformation and foundation movement
- *Annex J* (informative): checklist for construction supervision and performance monitoring.

Annex A is to be used with *Sections 6* to *12*, as it gives the relevant partial and correlation factors for ultimate limit state design. *Annex A* is normative, which means that it is an integral part of the standard and must be applied. However, the values of the partial and correlation factors, given in informative notes, are recommended values and therefore may be modified in the National Annex for each country.

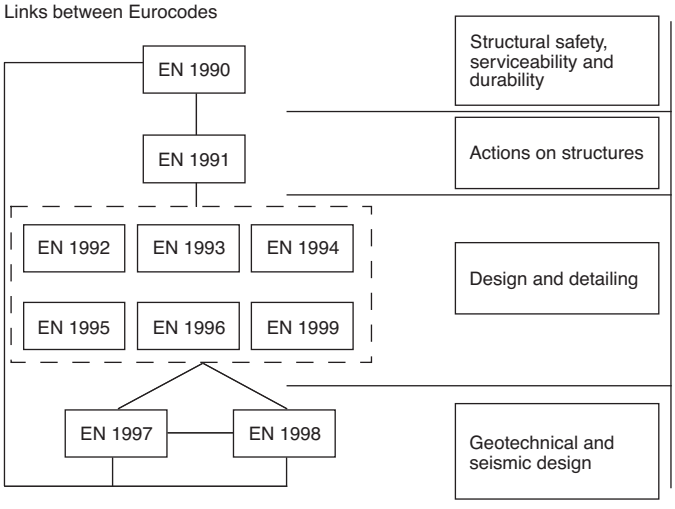

Fig. 1.1. Scope of the 10 Eurocodes and the links between them

Annex B gives some background information on partial factors for applying the three possible Design Approaches permitted by EN 1990 and by EN 1997-1 (for ultimate limit states in persistent and transient situations).

Annexes C to *J* are informative, which means that in a given country, a choice can be made in the National Annex whether or not to apply them in that country.

Annexes C to *G* are examples of internationally recognized calculation methods relevant to the design of foundations or retaining structures.

Annex H deals with limiting movements of foundations, and *Annex J* is a proposed checklist for construction supervision and performance monitoring.

The contents of each annex are discussed in this guide in the chapter that corresponds to the appropriate section of EN 1997-1.

1.1.4. Eurocode 7 – Part 2

EN 1997-1 will be supplemented by a second part: EN 1997-2, *Eurocode 7*: *Geotechnical Design*, Part 2: *Ground Investigation and Testing*. Part 2 will give the general requirements and rules for the performance and evaluation of laboratory and field testing for use in geotechnical design. Note that Part 2 is the result of the merger of the two pre-standards ENV 1997-2 and ENV 1997-3. *Clause 1.1.3(1)*

1.2. References

There are references in *clause 1.2*(*1*) to the other Eurocodes and to other standards that are relevant for geotechnical designs to EN 1997-1. The list of the 10 Eurocodes is given in the Foreword to this guide. Figure 1.1 illustrates the scope of these Eurocodes and the links between them. *Clause 1.2(1)*

The execution (or construction) of geotechnical works is covered by Eurocode 7 only to the extent necessary to comply with the assumptions in the design rules. A series of European standards on the execution of special geotechnical works is presently (July 2004) being developed under the auspices of CEN Technical Committee 288 (CEN/TC 288); a list of these standards is provided in Eurocode 7 and is reproduced in Table 1.1. Reference to corresponding CEN/TC 288 standards is given in the various sections of EN 1997-1, where relevant. *Clause 1.1.1(6)* *Clause 1.1.1(5)* *Clause 1.2(1)*

European standards for the execution of many geotechnical tests are being drafted under the auspices of CEN/TC 341 on geotechnical investigation and testing. The present list of expected test standards and technical specifications is given in Table 1.2.

1.3. Assumptions

Clause 1.3(2) The assumptions on which the provisions of EN 1997-1 are based, and with which the users of the code must strive to comply, are that:

(1) data required for design are collected, recorded and interpreted by appropriately qualified personnel
(2) structures are designed by appropriately qualified and experienced personnel
(3) adequate continuity and communication exist between the personnel involved in data-collection, design and construction
(4) adequate supervision and quality control are provided in factories, in plants, and on site
(5) execution is carried out according to the relevant standards and specifications by personnel having the appropriate skill and experience
(6) construction materials and products are used as specified in EN 1997-1 or in the relevant material or product specifications
(7) the structure will be adequately maintained to ensure its safety and serviceability for the designed service life
(8) the structure will be used for the purpose defined for the design.

Clause 1.3(3) These assumptions need to be considered both by the designer and the client. To prevent uncertainty, compliance with them should be documented, e.g. in the geotechnical design report.

The seventh and eighth assumptions relate to the responsibilities of the client (owner/user), who needs to be aware of his/her responsibilities regarding a maintenance regime for the structure and needs to ensure that neither overloading nor change in the local or surrounding geotechnical conditions takes place. The designer of the structure should recommend a maintenance regime, and should clearly state to the owner the limits of intended use in terms of loads, as well as the ground conditions assumed in the design (i.e. water levels and other relevant conditions).

Table 1.1. Work programme of CEN/TC 288 on the execution of special geotechnical works

Document	Title	Status at July 2004	Future progress
EN 1536: 1999	*Bored Piles*	EN published: see year in title	NA
EN 1537: 1999	*Ground Anchors*		
EN 1538: 2000	*Diaphragm Walls*		
EN 12063: 1999	*Sheet Piling*		
EN 12699: 2000	*Displacement Piles*		
EN 12715: 2000	*Grouting*		
EN 12716:2001	*Jet Grouting*		
prEN 14199	*Micro Piling*	prEN dated April 1998	Conversion to EN in progress
prEN 14475	*Reinforcement of Fills*	prEN dated March 2002	CEN enquiry stage
prEN 14490	*Soil Nailing*		
prEN 288011	*Deep Mixing*		CEN enquiry stage
	Deep Vibration	Drafting	Working groups in progress
	Deep Drainage		

Table 1.2. Work programme of CEN/TC 341 on geotechnical investigation and testing

Title	Status at July 2004
TC 341 Testing Standards	
Drilling and Sampling Methods, and Groundwater Measurements: *Part 1: Sampling – Principles* *Part 2: Sampling – Qualification Criteria* *Part 3: Sampling – Conformity Assessment*	Part 1 nearing completion ready for public enquiry in 2004; Parts 2 and 3 to follow in spring 2004
Cone and Piezocone Penetration Tests: *Part 1: Electrical Cone and Piezocone* *Part 2: Mechanical Cone*	Part 1: to enquiry in mid-2004; Part 2 to enquiry late 2004
Dynamic Probing and Standard Penetration Test	Public enquiry completed; publication in 2004 of the two standards
Vane Testing	Drafting underway; target date for enquiry is 2005
Borehole Expansion Tests: *Ménard Pressuremeter* *Flexible Dilatometer* *Self-boring Pressuremeter* *Borehole Jack* *Full Displacement Pressuremeter* *Borehole Shear Test*	Drafts on the Ménard pressuremeter, the flexible dilatometer and the borehole jack tests are well advanced
Plate Load Test	Drafting yet to commence
Pumping Tests	Drafting yet to commence
Testing of Geotechnical Structures: *Pile Load Test – Static Axially Loaded Compression Test* *Pile Load Test – Static Axially Loaded Tension Test* *Pile Load Test – Static Transversally Loaded Tension Test* *Pile Load Test – Dynamic Axially Loaded Compression Test* *Testing of Anchorages* *Testing of Nailing* *Testing of Reinforced Fill*	Drafting of pile load test documents now underway, as is the document on testing of anchorages
TC 341 Technical Specifications	
Water Content *Density of Fine Grained Soils* *Density of Solid Particles* *Particle Size Distribution* *Oedometer Test* *Fall Cone Test* *Compression Test* *Unconsolidated Triaxial Test* *Consolidated Triaxial Test* *Direct Shear Test* *Permeability Test* *Laboratory Tests on Rock*	All out for editorial comment

1.4. Distinction between Principles and Application Rules

Clause 1.4(1) In Eurocode 7, as in all other Eurocodes, a distinction is made between Principles and Application Rules, depending on the character of the individual clauses. Eurocode 7 states that:

Clause 1.4(2)
- The Principles comprise:
  - general statements and definitions for which there is no alternative
  - requirements and analytical models for which no alternative is permitted unless specifically stated.

Clause 1.4(3)
- The Principle clauses are preceded by the letter P following the paragraph number.
- Application Rule clauses are identified by the paragraph number only.

Clause 1.4(4)
- The Application Rules are examples of generally recognized rules which follow the Principles and satisfy their requirements.

Clause 1.4(5)
- It is permissible to use alternatives to the Application Rules provided it is shown that the alternative rules accord with the relevant Principles.

The word 'shall' is always used in Principle clauses. The word 'should' is normally used for Application Rule clauses; the word 'may' is also used, for example in an alternative Application Rule. The words 'is' and 'can' are used for a definitive statement or as an 'assumption'.

Clause 1.4(5) With regard to alternatives to the Application Rules, *clause 1.4*(*5*) and the note to the clause (both reproduced from EN 1990) add that the alternatives should at least demonstrate equivalent levels of structural safety, serviceability and durability to those expected when using the Eurocode. Furthermore, if an alternative rule is substituted for an Application Rule, the resulting design cannot be claimed to be wholly in accordance with EN 1997-1 although the design may remain in accordance with the Principles of EN 1997-1.

It has already mentioned in the Foreword to this guide that, in implementing Eurocode 7 through its National Annex, a member state has special dispensation to refer to 'supplementary rules/standards'; these are meant to provide application rules that confirm to the Principles of the code but which are not provided in it. Therefore, as mentioned above, these 'supplementary rules/standards' are not 'alternatives' to any application rules that **are** provided in the code.

1.5. Definitions

1.5.1. Definitions common to all Eurocodes

Clause 1.5.1(1) Much of the limit state design terminology is defined in EN 1990 (see also the companion title to this guide, the *Designer's Guide to EN 1990*, *Eurocode: Basis of Structural Design*) and is not repeated in Eurocode 7. In fact, repetition of any kind is avoided as far as possible. Therefore, users of Eurocode 7 are advised to have EN 1990 available.

It is important to note that in all the Eurocodes an 'action' is defined as a load or an imposed deformation, e.g. a temperature effect or settlement (clause 1.5.3.1 of EN 1990). Examples of actions in geotechnical design are given in *clause 2.4.2*, and comments on geotechnical actions are given in Chapter 2 of this guide.

1.5.2. Definitions specific to Eurocode 7

Terms which are specific to Eurocode 7, or are repeated (and adapted) from EN 1990, are defined as follows:

Clause 1.5.2.1
- *Geotechnical action*: action transmitted to the structure by the ground, fill, standing water or groundwater (definition adapted from clause 1.5.3.7 of EN 1990). Examples of geotechnical actions are earth pressures on retaining walls and downdrag on piles.

Clause 1.5.2.2
- *Comparable experience*: documented or other clearly established information related to the ground being considered in design, involving the same types of soil and rock and for

which similar geotechnical behaviour is expected, and involving similar structures. Information gained locally is considered to be particularly relevant.

- *Ground*: soil, rock and fill in place prior to the execution of the construction works. *Clause 1.5.2.3*
- *Structure*: an organized combination of connected parts, including fill placed during execution of the construction works, designed to carry loads and provide adequate rigidity (definition adapted from EN 1990). *Clause 1.5.2.4*
- *Derived value*: value of a geotechnical parameter obtained by theory, correlation or empiricism from test results. *Clause 1.5.2.5*
- *Stiffness*: material resistance against deformation. *Clause 1.5.2.6*
- *Resistance*: capacity of a component, or cross-section of a component, of a structure to withstand actions without mechanical failure, e.g. resistance of the ground, bending resistance, buckling resistance and tensile resistance (definition adapted from EN 1990). *Clause 1.5.2.7*

The verbs 'consider', 'assess', 'account' and 'evaluate' are used frequently throughout Eurocode 7, for example in *Clause 3.3*, but are not defined in Eurocode 7. The following definitions for these verbs, based on Orr and Farrell (1999) and Simpson and Driscoll (1998), are offered:

- *To consider* is to think carefully and rationally about all relevant factors affecting the design and to decide, on the basis of the available information, what effects they are likely to have. If it is decided that one (or more) of them affects the design, then it must be included in the design, while if it is decided that the factor is not significant for the design, then it may be ignored. The verb 'consider' often does not imply the need to include the factors in a calculation, although this may be appropriate in some cases. It is recommended that, in a geotechnical design, checklists are prepared of the items to be considered and that the designer should put a mark against the items on the checklist once they have been considered.
- *To assess* is to use a process involving some combination of calculation, measurement and comparable experience, including consideration of all relevant factors, to obtain the numerical value of a parameter or check if certain criteria are satisfied.
- *To take into account* is to include the influence of an aspect of the design process. In Eurocode 7 this phrase generally has a stronger meaning than 'to consider', and implies that the influence of the aspect *is* included in the design calculation.
- *To evaluate* is to determine the numerical value of a parameter, taking account of all relevant factors affecting its value.

1.6. Symbols

Many symbols used in limit state design are defined in EN 1990 and are not repeated in Eurocode 7.

All the symbols unique to Eurocode 7 are listed in *clause 1.6(1)*. They are in accordance with ISO 3898, as well as with the recommendations of the International Society for Soil Mechanics and Geotechnical Engineering (ISSMGE, 1981). *Clause 1.6(1)*

Characteristic values of parameters are identified by the subscript 'k', while design values are identified by the subscript 'd'. The subscript 'dst' indicates a destabilizing action while the subscript 'stb' indicates a stabilizing one.

In this guide the same symbols and subscripts are used as in EN 1997-1.

The 'Système International' (SI) units should be used in geotechnical designs to Eurocode 7. These units are defined in ISO 1000.

The units most commonly used in geotechnical calculations are presented in Eurocode 7 in *clause 1.6(2)*. *Clause 1.6(2)*

CHAPTER 2

Basis of geotechnical design

In this chapter the basic philosophy and concepts of EN 1997-1 are presented. The chapter describes the material covered by *Section 2* of EN 1997-1, together with *Annex A*, for partial factors, and *Annex B* for background information on Design Approaches 1, 2 and 3.

The structure of the chapter follows that of *Section 2*:

2.1.	Design requirements	*Clause 2.1*
2.2.	Design situations	*Clause 2.2*
2.3.	Durability	*Clause 2.3*
2.4.	Geotechnical design by calculation	*Clause 2.4*
2.5.	Design by prescriptive methods	*Clause 2.5*
2.6.	Observational method	*Clause 2.7*
2.7.	Geotechnical Design Report	*Clause 2.8*

An appendix presents information on the use of statistical methods for the quantitative assessment of characteristic values.

2.1. Design requirements

EN 1990 defines limit states as 'states beyond which the structure no longer fulfils the relevant design criteria'. The aim of limit state design is to check that no limit state is exceeded when the relevant design values of actions, of material or product resistance properties and of geometrical properties are used in appropriate calculation models. In order to simplify the design procedures, two fundamentally different types of limit state are generally recognized, each of them having its own relevant design criteria (see the *Designers' Guide to EN 1990*, pp. 36–40, for further discussion on limit states (Gulvanessian *et al*., 2002)): *Clause 2.1(1)P*

- ultimate limit states (ULS) defined in EN 1990 as 'states associated with collapse or with other similar forms of structural failure' (e.g. failure of the foundation due to insufficient bearing resistance);
- serviceability limit states (SLS) defined in EN 1990 as 'states that correspond to conditions beyond which specified service requirements for a structure or structural member are no longer met' (e.g. excessive settlement related to the intended use of the structure).

Ultimate limit states corresponding to full 'collapse' of geotechnical structures are extremely rare; instead, ultimate states usually develop from such large displacements that the safety requirements of the supported structure are no longer fulfilled. Therefore, the code requires a check to be made that ultimate limit states cannot occur through failure of the ground, or through failure of the supported structure itself; the avoidance of an ultimate *Clause 2.1(3)* *Clause 2.4.7.1(1)P*

limit state in the supported structure due to very large (excessive) deformations in the ground should be also checked.

Clause 2.1(4) The avoidance of limit states should be checked by one or a combination of following:

- use of calculations (described in *clause 2.4*)
- the adoption of prescriptive measures (described in *clause 2.5*), in which a well established and proven design is adopted without calculation under well defined ground and loading conditions
- tests on models or full scale tests (described in *clause 2.6*), which are particularly useful in the design of piles and anchors
- the observational method (described in *clause 2.7*).

Clauses 2.1(8) to 2.1(28) To establish geotechnical design requirements EN 1997-1 recommends the classification of structures into Geotechnical Categories 1, 2 or 3 according to the complexity of the structure, of the ground conditions and of the loading, and the level of risk that is acceptable for the purposes of the structure; however, this categorization is not mandatory. Geotechnical Categories are used in the code to establish the extent of site investigation required and the amount of effort to be expended in the checking of the design. In Fig. 2.1 a flow diagram illustrates the stages of geotechnical design according to the principles and rules of EN 1997-1. It is important to note that the Geotechnical Category should be checked at each stage of the design and construction processes.

Clauses 2.1(14) to 2.1(21) Simple structures with negligible risk and where the requirements can be satisfied on the basis of local experience will fall into Category 1. Most structures will be in Category 2, whilst complex problems fall into Category 3.

Clause 2.1(19) EN 1997-1 concentrates on structures in Geotechnical Category 2, and lists examples of typical design problems.

Figure 2.2 is a flow chart to assist in the assignment of a problem to an appropriate geotechnical category.

2.2. Design situations

The geotechnical design must be checked for the relevant 'design situations'. These should be selected so as to encompass all conditions which are reasonably foreseeable as likely to occur during the construction and use of the structure. The different design situations for ultimate and serviceability limit states are defined in EN 1990, and discussed in the *Designers' Guide to EN 1990* (pp. 35–36). EN 1997-1 deals with ultimate limit states in persistent and transient situations and in accidental situations, and with serviceability limit states.

Clause 2.2(1) Where the mass permeability of saturated ground is relatively low (i.e. the time required for the dissipation of excess positive or negative pore water pressures generated by construction activities is large compared with the time of construction), both drained and undrained situations have to be considered in the checking of the ultimate limit state; that is, the undrained condition with excess pore water pressures and the drained condition when the pore water pressures have dissipated. Undrained conditions are likely to be critical when fine-grained soils are loaded and where pore water pressure dissipation with time causes an increase in the soil strength. Typically, such conditions exist during the loading of soft clays (e.g. in soft clays beneath dams). Drained conditions are likely to be critical in fine-grained soils where negative pore water pressure dissipation with time causes a decrease in the soil strength. Typically, such conditions exist during the unloading of stiff clays, e.g. after excavating a cutting.

Clause 2.2(2) A list is presented in *clause 2.2*(*2*) for consideration of items which can be important when specifying the design situations.

The probability of occurrence and the consequences of the various design situations may be different. The safety requirements may thus also be different. For example, for

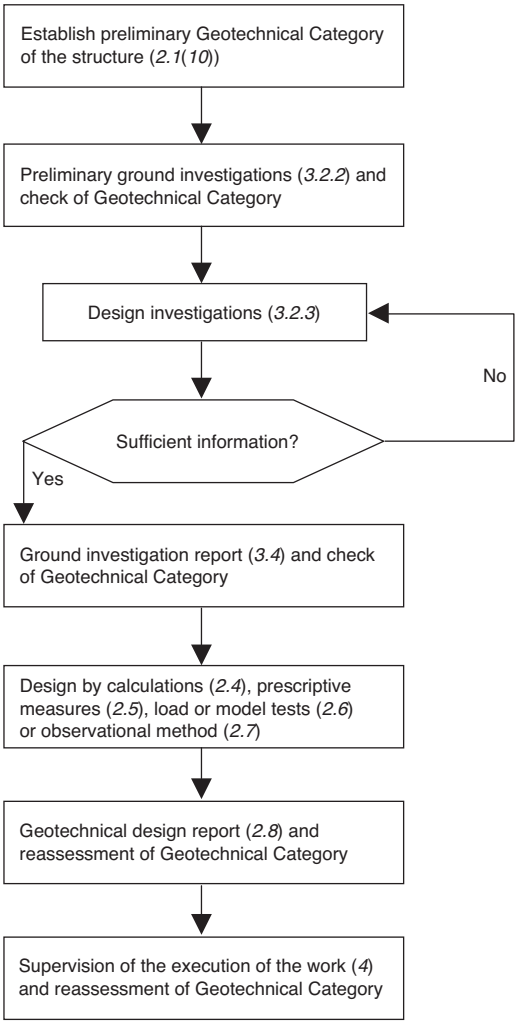

Fig. 2.1. The design process of EN 1997-1 (the numbers in parentheses refer to the relevant section and clause in EN 1997-1). (After Simpson and Driscoll, 1998)

an accidental situation a structure may be required merely not to collapse, with the serviceability condition being irrelevant (for further details see p. 30).

Seismic design situations are not treated in EN 1997-1; the reader is referred to EN 1998-5, *Eurocode 8: Design of Structures for Earthquake Resistance – Part 5: Foundations, Retaining Structures and Geotechnical Aspects*.

2.3. Durability

Durability is the ability of the structure to remain fit for use during its design life, given appropriate maintenance. For geotechnical structures, maintenance is often difficult or impossible. In this case, the design should take into account the degradation of materials over time due to any aggressiveness of the environment (ground, groundwater chemistry) by providing adequately resistant materials or protection for them. *Clause 2.3(1)P*

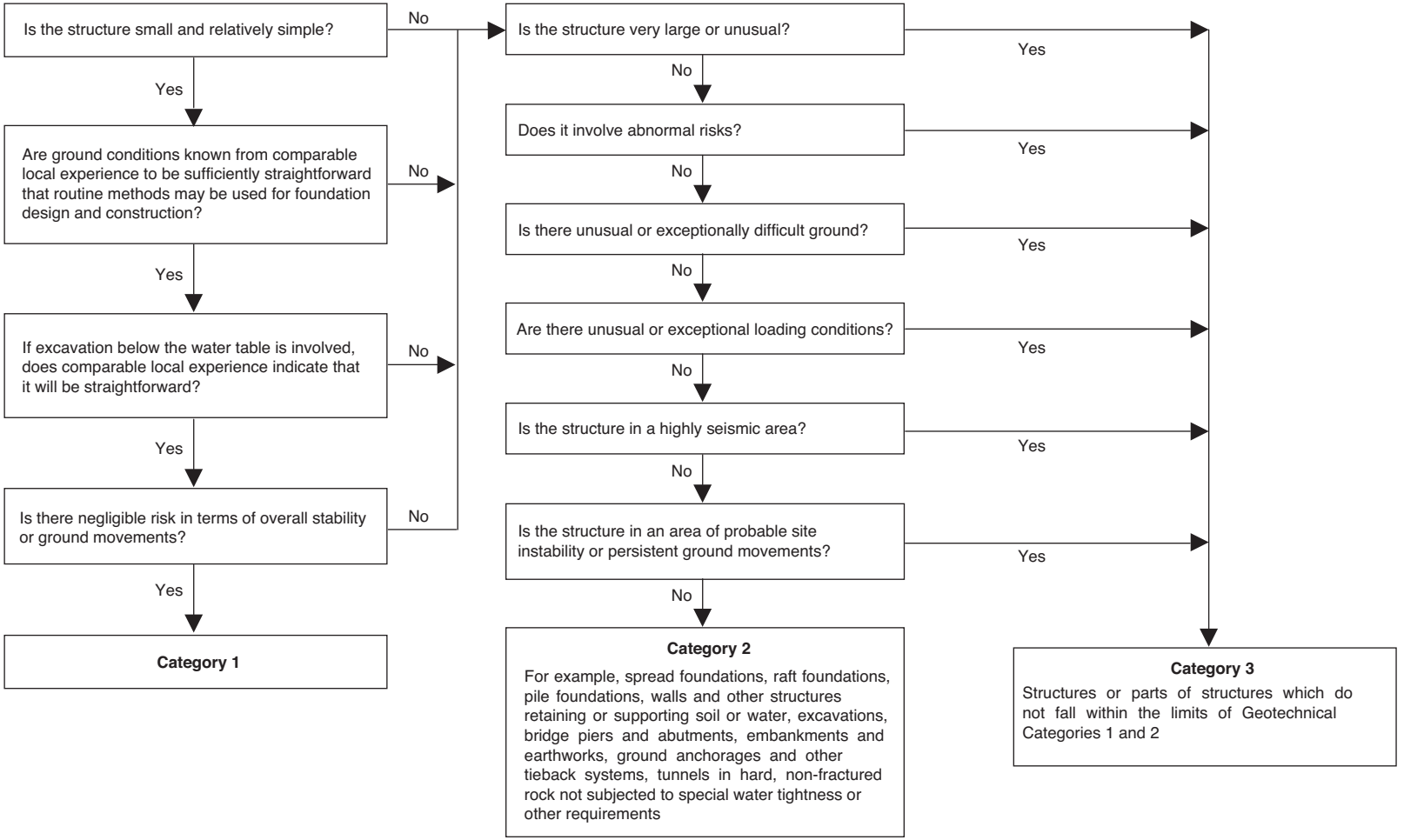

Fig. 2.2. Flow chart for geotechnical categorization. (After Simpson and Driscoll, 1998)

2.4. Geotechnical design by calculation

2.4.1. General

EN 1990 defines the actions that have to be considered in the calculations. The values of structural actions must be taken from EN 1991, whereas EN 1997-1 deals with *Clause 2.4.1(1)P*

- geotechnical actions
- geotechnical resistance.

Design by calculation is the most commonly applied procedure for checking the avoidance of limit states. It is therefore the main subject of EN 1997-1.

The limit state design procedure involves:

- establishing actions, which may be either imposed loads or imposed displacements
- establishing ground properties and properties of the structural materials
- defining limiting values of deformation, crack width, vibrations, etc.
- setting up calculation models for the relevant ultimate and serviceability limit states which predict the effect of actions, the resistance and/or the deformations of the ground and in which the various design situations are considered
- showing that the limit states will not be exceeded in the design situations by using appropriate calculation models.

The design values of actions and material resistances, as well as the load (action) combinations, are different for the persistent and transient design situations, for the accidental design situations and for the serviceability limit states.

Although design by calculation is the most commonly used method of geotechnical design, the designer should always be aware *Clause 2.4.1(2)*

> *that knowledge of the ground conditions depends on the extent and quality of the geotechnical investigations. Such knowledge and the control of workmanship are usually more significant to fulfilling the fundamental requirements than is precision in the calculation models and partial factors.*

The calculation model may consist of an analytical model, a semi-empirical rule or a numerical model. EN 1997-1 does not prescribe calculation models for the limit states, but some sample models are given in informative annexes. Several examples of analytical models and semi-empirical calculation rules are illustrated in the examples of this guide. Note that not only analytical and semi-empirical models are recognized by EN 1997-1, but also numerical models (the finite element method, finite differences, etc.), although they are not discussed further in the code. *Clauses 2.4.1(3)P to 2.4.1(5)*

When no reliable calculation model is available for a specific limit state, EN 1997-1 permits the analysis of another limit state, using factors to ensure that the specific limit state is sufficiently improbable. This approach is commonly used in geotechnical design for checking serviceability limit states in a simplified way, when no values of deformations are required to be known, by using ultimate limit state models (e.g. bearing capacity models) with rather large 'safety factors' on loads (see also Section 2.4.6 in this guide). This method is applied for example in *Section 6* by the 'indirect method' for checking the design of spread foundations. *Clause 2.4.1(4)*

Calculation models often include simplifications, the results of which should err on the side of safety. It may happen that the calculation model includes a systematic error or that it presents a range of uncertainty. The results of calculations based on such models may be modified, if needed, by a model factor to ensure that the results are either accurate or err on the safe side. Model factors may be applied to the effects of actions or to resistances. The practical use of model factors is illustrated in several chapters of this guide. *Clauses 2.4.1(6) to 2.4.1(9)*

2.4.2. Actions

Clause 2.4.2(1)P The characteristic values of actions must be derived using the principles of EN 1990. The values of the actions from the structure must be taken from EN 1991. EN 1997-1 is devoted to geotechnical actions on structures and to geotechnical resistances.

Actions may be loads (forces) applied to the structure or to the soil and displacements or accelerations that are imposed by the soil on the structure, or by the structure on the soil. Loads may be permanent (e.g. self-weight of structures or soil), variable (e.g. imposed loads on building floors) or accidental (e.g. impact loads).

It is necessary to distinguish between actions imposed by the structure on the ground and geotechnical actions imposed by the ground because, in some Design Approaches, partial factors are applied to each of them differently (see the section on Design Approaches on p. 31 of this guide).

Clause 2.4.2(9)P An important principle when dealing with actions is the 'single-source principle' (see note 3 in Table A.1.2(B) of Annex A.1 in EN 1990). This principle states that, if permanent actions arising from the same physical source act simultaneously both favourably and unfavourably, a single factor may be applied to the sum of these actions or to the effect of them. A typical example is water pressure acting on both sides of a retaining wall when the water is from the same hydrogeological formation; the effect of the water pressure on the active and passive sides of the retaining structure is therefore calculated using the same partial factor for both sides (see Example 9.2).

2.4.3. Ground properties

Clause 2.4.3(1)P EN 1997-1 stresses that ground properties must be obtained from results of tests or from other relevant data. Such data might be, for example, back-calculations of settlement measurements or of failures of foundations or slopes.

Clause 2.4.3(3)P
Clause 2.4.3(4) When assessing geotechnical parameters from test results, account must be taken of the possible difference between the properties obtained from the tests and those governing the behaviour of the ground mass and/or the geotechnical structure. A checklist is given of those factors that might cause these differences. One of the most important features to be checked is whether the ground shows marked strain-softening behaviour or brittleness. When the peak strength is exceeded locally, there is a dramatic loss of resistance, and redistribution of stresses might lead to further exceeding of the resistance of the ground, which may eventually lead to progressive failure.

Section 2.4.4 of this guide provides further explanation.

2.4.4. Characteristic values of geotechnical parameters

General

Clause 2.4.5.2(1)P The process of selecting, from laboratory and/or field measurements, characteristic values for the geotechnical parameters relevant for design can usually be divided into two main steps (Fig. 2.3):

- Step 1: establish the values of the appropriate ground properties
- *Clause 2.4.5.2(2)P* Step 2: from these, select the characteristic value as a cautious estimate of the value affecting the occurrence of the limit state, including all relevant, complementary information.

All aspects concerned with step 1 are discussed in Section 3.3.3 of this guide. This chapter deals with step 2.

Clause 2.4.5.2(2)P EN 1997-1 defines the characteristic value as being '*selected as a cautious estimate of the value affecting the occurrence of the limit state*'. Each word and phrase in this clause is important:

- *selected* – emphasizes the importance of engineering judgement
- *cautious estimate* – some conservatism is required
- *limit state* – the selected value must relate to the limit state (this is discussed further in Chapter 3).

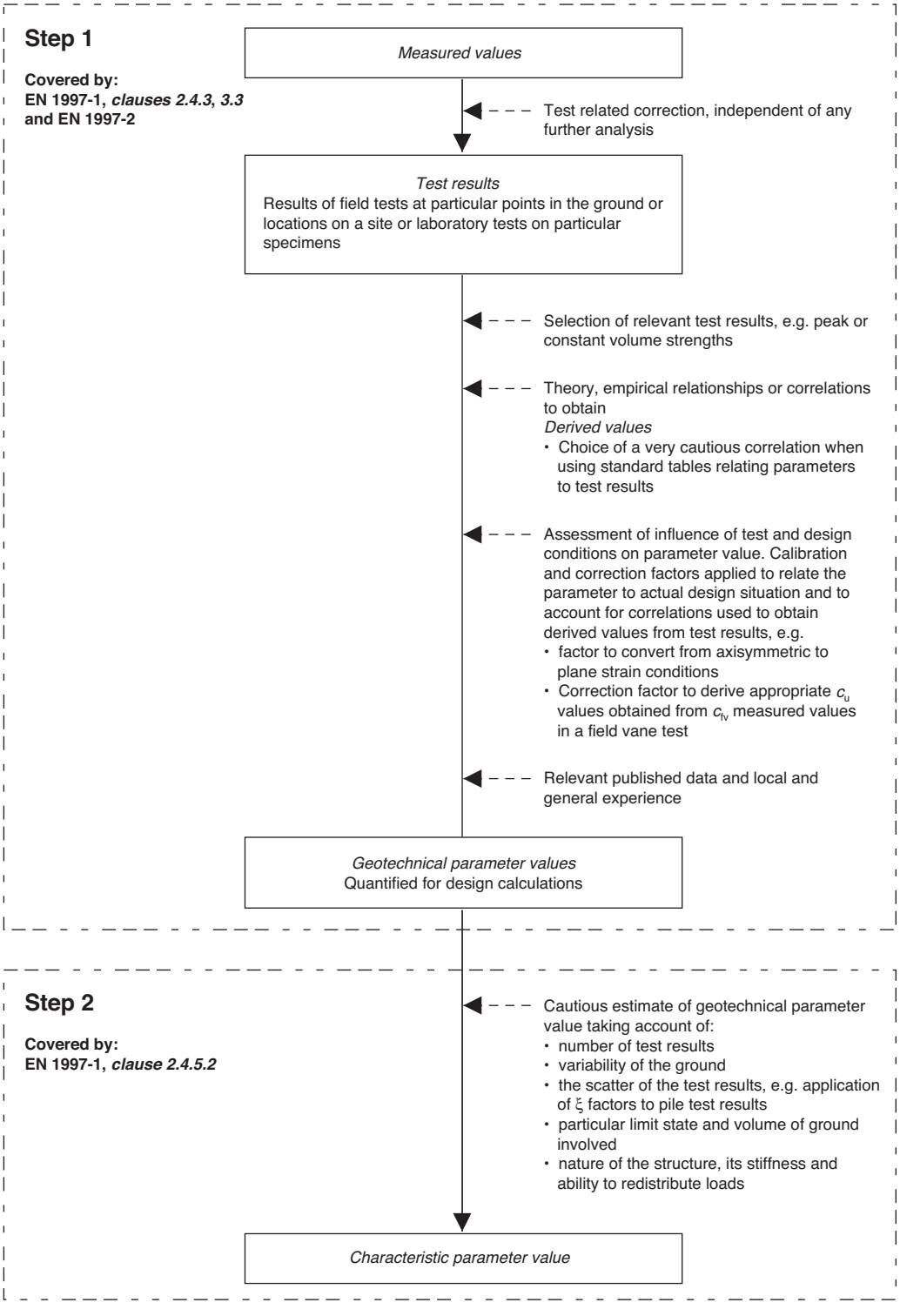

Fig. 2.3. General procedure for determining characteristic values from measured values

Clause2.4.5.2(4)P There are two major aspects to consider when selecting the characteristic value:

(1) the amount of, and degree of confidence in, knowledge of the parameter values
(2) the soil volume involved in the limit state considered and the ability of the structure to transfer loads from weak to strong zones in the ground.

Amount and degree of confidence in the information

The cautiousness with which a characteristic value will be selected depends on, among other things, the confidence the geotechnical engineer has in his or her knowledge of the ground. This is determined by:

(1) the amount of information (local test results and other relevant information)
(2) the scatter (variability) of the results.

Clearly, the larger the number of tests performed at the site and the greater the amount of other relevant information, the better the determination can be expected to be of the characteristic value governing the occurrence of a limit state in the ground. Any other relevant background information may include tests in the neighbourhood and regional or geological database information. This is especially important for simple projects, where normally only a small number of test results are available. A cautious margin between the selected characteristic value and, for example, the mean value of the test results will be larger if only a small number of test results is available.

Clearly also, the larger the scatter of the results, the greater the uncertainty about the value governing the limit state in the ground. The cautious margin between the selected characteristic value and, for example, the mean value of the test results will be larger if the test results show a large scatter.

It should be noted that a cautious estimate of the mean property value in a soil layer may sometimes be misleading as it does not reveal, say, weak zones which may govern the occurrence of the limit state. Examples of such weak zones which should be detected in the ground investigations are:

- previously developed failure surfaces
- a kinematically admissible slip surface through a 'chain' of weak points.

Soil volume involved and ability of the structure to transfer loads

Clause 2.4.5.2(7) The values of test results of ground parameters fluctuate at random (stochastically) around a mean value or a mean trend. *In situ* or laboratory tests involve small volumes of soil. The volume of the soil involved in a limit state in the ground is much larger than the volume of a test sample. Therefore, the test results have to be averaged over the volume of soil involved in the limit state considered. Consequently, a value very close to the mean value of the soil parameter governs the limit state when:

- a 'large' soil volume within the homogeneous layers is involved, allowing for compensation of weaker areas by stronger areas or
- *Clause 2.4.5.2(9)* the structure is sufficiently stiff and strong to transfer forces from 'weaker' foundation points to 'stronger' foundation points.

It should be noted that piled foundations are an example where advantage may be taken of the ability of the structure to redistribute loads between the piles (see Chapter 7, ξ values). In this case, the stiffness of the structure must be sufficient to allow transfer of load from 'softer' to 'harder' piles.

Clause 2.4.5.2(8) On the other hand, a value close to the (randomly occurring) lowest values of the soil parameter may govern the limit state when:

- a 'small' volume of ground is involved and the failure surface may develop mainly within the volume of weak soil and/or
- the structure fails before transfer of forces from the 'weak' to the 'strong' areas occurs, because it is not sufficiently strong and stiff.

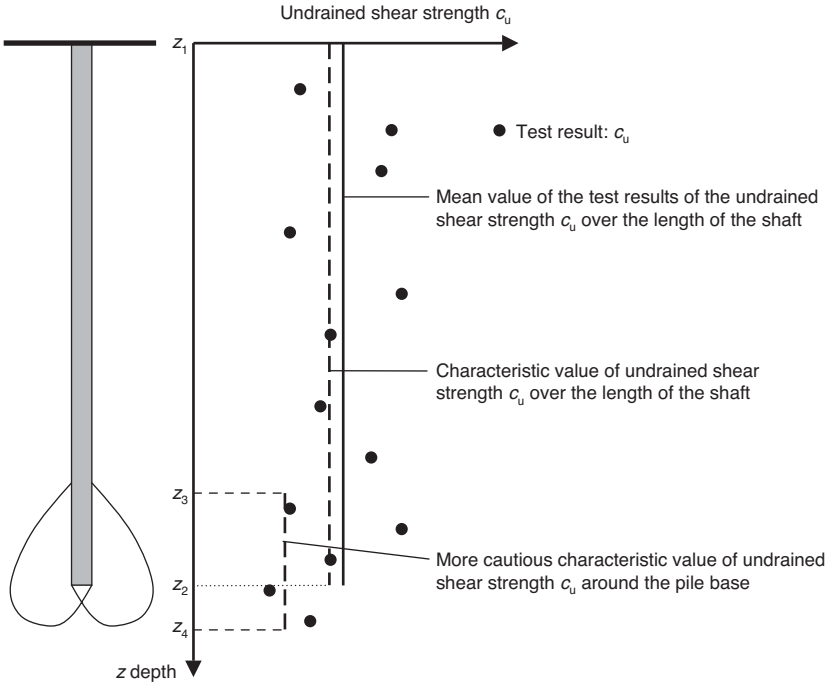

Fig. 2.4. Characteristic values of undrained shear strength c_u for the determination of shaft and base resistance of a pile

In such cases the selected characteristic value should be close to the lowest test result, or the mean value of the test results in the relevant (small) volume of soil.

Figure 2.4 illustrates the items above and shows the test results for undrained shear strength c_u as a function of depth. The pile shaft resistance, which averages the strengths over the length of the shaft, should be calculated from a characteristic value which is a cautious estimate of the mean of the test results of undrained shear strength along the shaft between the depth z_1 and z_2. The base resistance, which is determined by a small volume of ground around the pile base, should be calculated using a characteristic value close to the lowest test result between depth z_1 and z_4 if there are no test results in the small volume which is relevant for the behaviour of the base. If there are such test results, as is the case in Fig. 2.4, a cautious estimate of the mean of the test results between depths z_3 and z_4 should be taken. The characteristic value shown in Fig. 2.4 is a very cautious estimate of the mean, with greater emphasis placed on the lowest value as very few test results are available between depths z_3 and z_4.

Characteristic values are usually values lower than the most probable value (when lower values of ground parameters yield more conservative results, e.g. for bearing capacity problems). In some situations, when higher values of ground parameters yield more conservative results, e.g. downdrag, the characteristic values should be greater than the most probable value. *Clause 2.4.5.2(5)*

Some limit states may be governed more by the difference between the highest and lowest values, rather than by the mean values themselves. This is especially relevant for serviceability limit states, where differential settlements may be more detrimental than overall settlements. Differential settlements are governed by the difference between 'lower' and 'higher' mean values of soil compressibility parameters. In this case, the determination of characteristic values should focus on the differences between weaker and stronger zones and on the extent of these zones, in relation to the stiffness of the supported structure. Where the parameters are independent, the most adverse combination of upper and lower values should be used. *Clause 2.4.5.2(6)P*

Use of statistical methods

Clause 2.4.5.2(10) Statistical methods may be used when selecting characteristic values of geotechnical parameters, but they are not mandatory. The statistical techniques aim to calculate the 'characteristic' parameter value from the sample parameters (mean value, standard deviation) and *a priori* knowledge. The characteristic value is selected such that there is only a small probability that the value governing the limit state in the ground will be less favourable than the characteristic value.

Clause 2.4.5.2(11) The use of statistical methods implies that there is a sufficiently large number of test results (these test results may include data from previous experience).

When statistical methods are used, the code recommends that the calculated probability of a worse value governing the occurrence of the limit state considered should not be greater than 5%. The note of *clause 2.4.5.2*(*11*) raises the difference between a situation where a cautious estimate of the '*mean value of the limited set of geotechnical parameter values*' becomes relevant and a situation '*where local failure is concerned*'.

When the mean value of a soil parameter governs a limit state (e.g. when the limit state is governed by a large soil volume and when redistribution can occur), the characteristic value $X_{c,\,mean}$ should be selected as a cautious estimate of the (unknown) mean value. The statistical methods need to deliver an estimate of $X_{c,\,mean}$, the unknown mean value of the parameter governing the limit state in the ground, with a given confidence level (e.g. 95%) that this value will be more favourable than the characteristic value $X_{c,\,mean}$ (see Fig. 2.5).

When a cautious estimate of the local low value is sought (e.g. if a small soil volume is involved in the limit state and there are no test results in the small soil volume), the characteristic value X_{low} should be selected such that there is only a 5% chance that somewhere in the ground a value is less favourable than the characteristic value. In such cases the characteristic value X_{low} should be selected as a 5% fractile (see Fig. 2.5).

In many cases the 5% fractile will give a very low characteristic value X_{low}, which may result in a very conservative design. In such cases it is advisable to intensify the ground investigation and determine the local mean parameter values at those locations where they are relevant for design (see Fig. 2.4).

Clause 2.4.5.2(10) The statistical formulae to determine the 95% reliable mean value or the 5% fractile depend on the type of population, the type of samples and the amount and reliability of *a priori* knowledge. Populations **without trend** and populations **showing significant trend** should be distinguished. In a homogeneous population without trend, the fluctuations of the values of the parameter are purely random around the mean value. There is no relationship between the value of the parameter and location. In a population with trend, the parameter values are randomly distributed around a clearly distinguishable variation as a function of another parameter. The sample data, and any other relevant information (e.g. geological information), can be used to decide whether the population has a significant trend or is homogeneous. Examples of trends are undrained shear strength increasing with depth, and drained shear strength increasing with normal stress. The statistical formulae are different for populations with and without trend.

Parameter values are gathered in statistical populations of 'samples'. Different types of statistical population are distinguished depending on the way the populations are built up. In a **local population**, the sample test results or the derived values are obtained from tests at the site of or very close to the geotechnical structure being designed. In the case of **regional populations**, the sample test results are obtained from tests on the same ground formation extending over a large area and collected, for example in a data bank. If a sufficiently large local population is available, it will be used primarily to select the characteristic value of the parameter considered; however, if no or only little local information is available, the selection of the characteristic value may be mainly based on results of regional sampling or other relevant experience. For structures of Geotechnical Categories 2 and 3, regional sampling should only be used for preliminary design. The assumed characteristic value should in a later stage be confirmed by local sampling. When a limited number of local

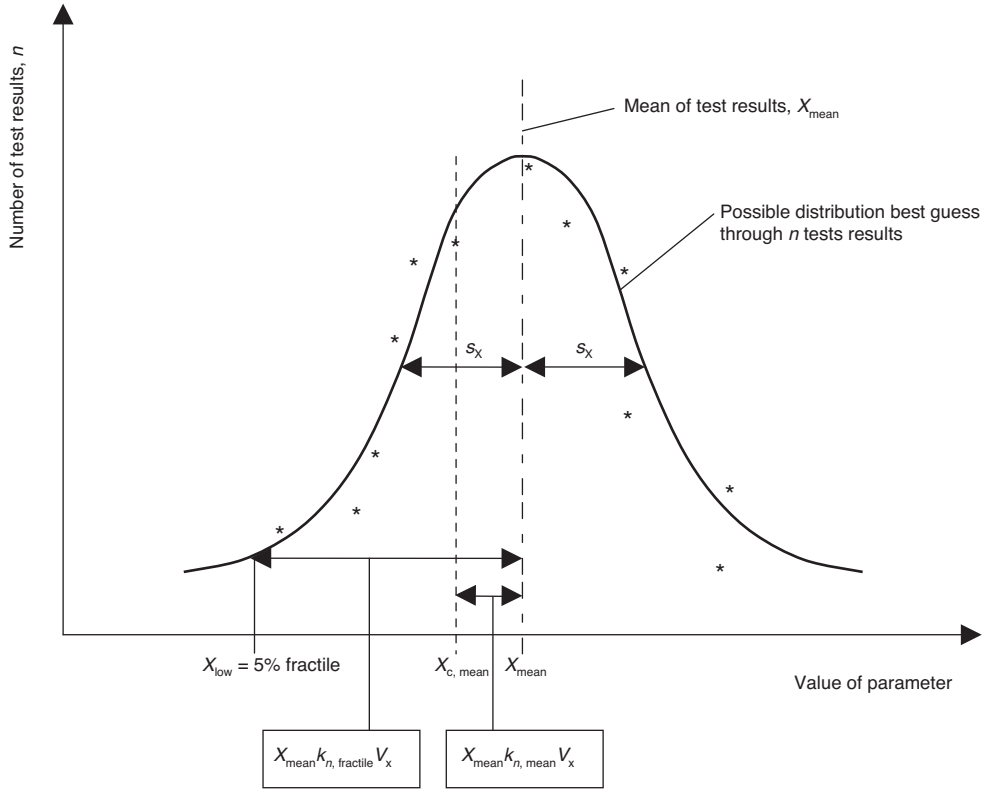

Fig. 2.5. Cautious estimate of the mean value $X_{c, mean}$ and cautious estimate of the local low value X_{low} by the 5% fractile from the sample parameters X_{mean} and s_X in the case 'V_X unknown'

test results are available, but an important regional population exists, both sources of information can be combined when selecting the characteristic value.

When selecting a characteristic value, any complementary information and *a priori* knowledge should be introduced. This can be done through Bayesian techniques. Discussion of Bayesian techniques is, however, outside the scope of this guide, and they are not practical for routine problems.

Another way to introduce *a priori* knowledge is by assuming the coefficient of variation V_X of the property is known. The concept of the case called 'V_X known' is introduced in EN 1990 (see EN 1990, clause D7.1(5)). Within a soil layer, the coefficient of variation does not vary much. Knowledge of the coefficient of variation can thus often be assumed when selecting the characteristic value. The statistical formula to be used will give a characteristic value which will be closer to the sample mean value, compared with the one to be used when the coefficient of variation of the property is not known from *a priori* knowledge (a case called 'V_X unknown') and has to be established from the sample data alone.

A simple approach to select the characteristic value X_k is to apply the equation (D2.1), given in the appendix to this chapter:

$$X_k = X_{mean}(1 - k_n V_X)$$

where X_{mean} is the arithmetical mean value of the parameter values; V_X is the coefficient of variation; and k_n is a statistical coefficient which depends on the number n of test results, on the 'type' of characteristic value ('mean' or 'fractile') and *a priori* knowledge about the coefficient of variation (case 'V_X unknown' or 'V_X known'). For further information on the application see the appendix to this chapter and Example 2.1.

Figure 2.5 illustrates the determination of characteristic values in the simple case of a sample consisting of n parameter values X_i in a homogeneous soil layer without trend. It is

assumed that the parameter has a normal distribution and there is no complementary information available (case 'V_X unknown'). The sample parameters are its mean value X_{mean} and standard deviation s_X. The characteristic value $X_{c,\,mean}$ is determined using equation (D2.1) so that there is a probability of 95% that the mean value governing the occurrence of a limit state in the ground is larger than the characteristic value. From Table 2.5 in the appendix to this chapter the coefficient k_n is then taken as the value of $k_{n,\,mean}$ for 'V_X unknown'.

This simple case illustrates that:

- the characteristic value $X_{c,\,mean}$ becomes closer to the sample mean X_{mean} as the number n of test results increases
- as the standard deviation s_X increases, the 'distance' between the sample mean X_{mean} and the characteristic value $X_{c,\,mean}$ increases.

Figure 2.5 also indicates the 5% fractile of the low value X_{low}, for comparison. X_{low} can be calculated using equation (D2.1) in which the value of k_n is taken as $k_{n,\,fractile}$ from Table 2.7 in the appendix. It should be noted that Table 2.7 distinguishes between the cases 'V_X unknown' and 'V_X known' for which the values of $k_{n,\,fractile}$ are different. $k_{n,\,fractile}$ is considerably greater than $k_{n,\,mean}$ for a 95% reliable mean value. Therefore, the value X_{low} of the fractile is considerably lower than the 95% reliable estimate $X_{c,\,mean}$ of the mean value.

Example 2.1 on the statistical evaluation of test results illustrates the difference between local low and mean values and shows the effect of the knowledge of the coefficient of variation, case 'V_X known'.

Further discussion and details on statistical methods and the formulae to be applied to determine characteristic values are given in the appendix to this chapter and in Appendix C of the *Designers' Guide to EN 1990*.

2.4.5. Ultimate limit states

General

Although EN 1997-1 deals with the design of different types of foundation, retaining structure and other geotechnical structures, the code does not specify which soil mechanics theories or soil behaviour models to use to determine, for example, the earth pressure acting on a retaining structure or the stability of a slope. But EN 1997-1 does state which design criteria are to be used in the calculations, and it makes mandatory the **format** of checking using partial factors. The **values** of the partial factors in *Annex A* are recommendations, and can be altered in the National Annex. (The general concepts of the method of checking by partial factors, the definition of the different partial factors and the uncertainties they cover are described in EN 1990 (see Section 6 and Annex C9).)

Clause 2.4.7.1(1)P EN 1997-1 distinguishes between five different types of ultimate limit state, and uses abbreviations for them that are defined in EN 1990:

- '*loss of equilibrium of the structure or the ground, considered as a rigid body, in which the strengths of structural materials and the ground are insignificant in providing resistance (EQU)*', e.g. tilting of a retaining structure on rock
- '*internal failure or excessive deformation of the structure or structural elements, including footings, piles, basement walls, etc, in which the strength of structural materials is significant in providing resistance (STR)*'
- '*failure or excessive deformation of the ground, in which the strength of soil or rock is significant in providing resistance (GEO)*', e.g. overall stability, bearing resistance of spread foundations or pile foundations
- '*loss of equilibrium of the structure or the ground due to uplift by water pressure (buoyancy) or other vertical actions (UPL)*'
- '*hydraulic heave, internal erosion and piping in the ground caused by hydraulic gradients (HYD)*'.

Formulae for checking these limit states are given in *clauses 2.4.7.2* to *2.4.7.5*.

The avoidance of ultimate limit states as dealt with in EN 1997-1 mainly applies to persistent and transient situations, and the partial factors proposed in *Annex A* are only valid for these situations. *Clause 2.4.7.1(2)P*

In accidental situations, all values of partial factors should normally be taken as equal to 1.0. Requirements and recommendations for seismic design are given in EN 1998-5. *Clause 2.4.7.1(3)*

In cases of abnormal risk or exceptionally difficult ground conditions, more severe values for the partial factors than those given in *Annex A* should be used. *Clause 2.4.7.1(4)*

Less severe values may be used for temporary structures or transient design situations where the likely conditions justify it. *Clause 2.4.7.1(5)*

In design situations where the ground strength acts in an unfavourable manner (e.g. downdrag or heave on piles), the design value of the unfavourable action may be obtained by either of the following methods:

(1) Applying the inverse of the *M*2 set of partial material factors as partial action factors to the characteristic unfavourable action (see Example 7.4).
(2) Applying the inverse of the *M*2 set of partial material factors to the characteristic material strengths to obtain the design strengths, and hence the design unfavourable action. When adopting this approach, if the soil strength parameters are used to calculate another component of the unfavourable action (e.g. the lateral earth pressure on piles), it is important to ensure that the application of this inverse partial factor to the characteristic soil strength to determine this component of the action does not, because of compensating effects, lead to reduced (unconservative) unfavourable actions, and hence reduced safety. A similar situation of possible compensating effects can arise when the ground strength acts in a favourable manner (as in the case of uplift; see Section 10.2.2, equation (D10.4)).

Clause 2.4.7.1(*6*) mentions cases where a model factor is applied to the effect of the actions instead of applying it at source to the characteristic value of the action. *Clause 2.4.7.1(6)*

Checking for static equilibrium

Checking for static equilibrium (EQU) presumes that the strength of the ground and the structure are insignificant in providing stability. Static equilibrium is mainly relevant in structural design. In geotechnical design, checking the avoidance of the EQU limit state applies only in rare cases such as a foundation, bearing on rock, which can tilt about an edge. The inequality for static equilibrium (*inequality* (*2.4*)) requires that the design value of the destabilizing action (e.g. the overturning moment from earth or water pressures) is not greater than the sum of the design value of the stabilizing action (e.g. restoring moment due to the weight of the structure) and the design value of any minor shearing resistance (e.g. on the side of the structure). Partial factors to apply for EQU checking in persistent and transient design situations are given in EN 1997-1, in *Tables A.1* and *A.2* of *Annex A*. *Clause 2.4.7.2(1)P*

Table A.2 is meant to apply to any minor shearing **resistance**. (This **resistance** should not be treated as a stabilizing **action** and therefore should not be factored using the partial factor values given in *Table A.1*.)

Checking against failure in the ground (GEO) and in the structure (STR)

When checking for limit states of failure or excessive deformation in the ground and in the structure, the following inequality must be satisfied: *Clause 2.4.7.3.1(1)P*

$$E_d \leq R_d \qquad (2.5)$$

where E_d is the design value of the effects of all the actions, and R_d is the design value of the corresponding resistance of the ground and/or structure.

In contrast to the checking of structural designs, geotechnical actions from and resistances of the ground cannot be separated: geotechnical actions sometimes depend on the ground resistance, e.g. active earth pressure, and ground resistance sometimes depends on actions,

e.g. the bearing resistance of a shallow foundation depends on the actions on the foundation. There are different and equivalent ways to account for this coupling between the geotechnical actions and resistances. Therefore, EN 1997-1 proposes three Design Approaches for checking the avoidance of failure in the ground (GEO) and in the structure (STR).

Design effects of actions

Clause 2.4.7.3.2(1)P

Effects of actions are functions of the action itself, of ground properties and of geometrical data. *Expressions* (*2.6a*) and (*2.6b*) express the calculation of the design values of the effects of actions in different mathematical forms, depending on the manner in which the partial factors are applied.

Partial factors for actions can be applied:

- either to the representative values F_{rep} of the action,

$$E_d = E\{\gamma_F F_{rep}, X_k/\gamma_M, a_d\} \qquad (2.6a)$$

- or to their effect (E),

$$E_d = \gamma_E E\{F_{rep}, X_k/\gamma_M, a_d\} \qquad (2.6b)$$

where γ_F is the partial factor for an action, γ_M is the partial factor for a material property, γ_E is the partial factor for the effect of actions and a_d is the design value of the geometrical data.

EN 1990 (clause 6.3.1) and *Annex B* of EN 1997-1 give some explanation of when to use either *expressions* (*2.6a*) or (*2.6b*). The term X_k/γ_M introduces into the calculation the effects of geotechnical actions such as earth pressures.

The following methods can be used for calculating the design value of the effect of a geotechnical action (see *Annex B.2* of EN 1997-1):

- by using design values of the strength parameters and by applying a partial factor γ_M larger than 1.0 to the source of the action
- by using design values that are equal to the characteristic values of the strength parameters, i.e. by applying a partial factor γ_M equal to 1.0.

Then, *expressions* (*2.6a*) and (*2.6b*) become

$$E_d = E\{\gamma_F F_{rep}, X_k, a_d\} \qquad (\textit{expression } (B.3.2) \text{ in } \textit{Annex B.2})$$

$$E_d = \gamma_E E\{F_{rep}, X_k, a_d\} \qquad (\textit{expression } (B.3.1) \text{ in } \textit{Annex B.2})$$

Clause 2.4.7.3.2(3)P

Recommended values of partial factors for use in persistent and transient situations are given in *Tables A.3* and *A.4*. Alternative values may be given in the National Annex. Rules for the combining of actions and values of the combination factor ψ are given in EN 1990.

Design resistances

Clause 2.4.7.3.3

The resistance in the ground is a function of the ground strength, X_k, sometimes of the actions, F_{rep} (when the value of the resistance is affected by the action, e.g. spread foundations subjected to inclined loads), and of the geometrical data. To obtain the design value of the resistance, R_d, partial factors can be applied either to ground properties (X) or to resistance (R), or to both, as follows:

$$R_d = R\{\gamma_F F_{rep}, X_k/\gamma_M, a_d\} \qquad (2.7a)$$

$$R_d = R\{\gamma_F F_{rep}, X_k, a_d\}/\gamma_R \qquad (2.7b)$$

$$R_d = R\{\gamma_F F_{rep}, X_k/\gamma_M, a_d\}/\gamma_R \qquad (2.7c)$$

where γ_R is the partial factor for the resistance of the ground.

In *expression* (*2.7a*) the design value of the resistance is obtained by applying the partial factor $\gamma_M > 1.0$ to the characteristic values of the ground strength parameters c'_k and $\tan \varphi'_k$ or $c_{u,k}$, etc. If actions play a role in the resistance, design values of actions

($\gamma_F \times F_{rep}$) are introduced in the calculation of R_d (see Design Approaches 1 and 3 and Figs 2.6 and 2.8).

In *expression* (*2.7b*) the design value of the resistance is obtained by applying the partial factor $\gamma_R > 1.0$ to the resistance obtained using design values equal to characteristic values of the ground strength parameters. If actions play a role in the resistance, design values of actions ($\gamma_F F_{rep}$) are introduced in the calculation of R_d (see Design Approach 2 and Fig. 2.7). If the effects of actions are factored (see *Annex B.3*(*6*) of EN 1997-1), $\gamma_F = 1.0$, and *expression* (*2.7b*) becomes

$$R_d = R\{F_{rep}, X_k, a_d\}/\gamma_R \qquad \text{(\textit{expression} (\textit{B.6.2.2}) in \textit{Annex B.3})}$$

Expression (*2.7c*) is similar to *expression* (*2.7a*), but a complementary resistance factor $\gamma_R > 1.0$ can be applied to obtain the design value of the resistance. This factor then acts merely as a model factor.

The values of partial factors to be used in the expressions above should be selected from *Annex A*; alternative values may be set in the National Annex.

Design Approaches

Expressions (*2.6*) and (*2.7*) differ in the way that they distribute the partial factors between actions, ground properties and resistances. Different combinations of *expressions* (*2.6*) and (*2.7*), and thus different ways to introduce the partial factors in the terms E and R of the fundamental *inequality* (*2.5*), have led to the three Design Approaches permitted in EN 1997-1. The choice of the Design Approach is for national determination, and should be stated in the National Annex. Different design problems may be treated by different Design Approaches. The values of the partial factors to apply with a chosen Design Approach are also left to national determination, as indicated in the National Annex.

Clause 2.4.7.3.4.1(1)P

The ways of combining sets of partial factors to obtain the design values of the effects of actions and of the resistance in *inequality* (*2.5*) are indicated in a symbolic way, e.g.

$A1$ '+' $M1$ '+' $R1$

The meaning of the above expression is as follows:

(1) the partial factors for the actions (γ_F) or the effects of actions (γ_E) are represented by the symbol A and are taken from set $A1$ in *Table A.3* of *Annex A* of EN 1997-1; the symbol '+' signifies that they are used in combination with
(2) the partial factors (γ_M) for strength (material) parameters of the ground (symbol M), which are taken from set $M1$ in *Table A.4*, and
(3) the partial factors for the resistance (γ_R) (symbol R), which are taken from set $R1$ in *Tables A.5* to *A.6*.

The procedure for combining partial factors described in a symbolic way above implies that a geotechnical action, or the effect of an action including a geotechnical action, will involve two sets of partial factors: An '+' Mn. Likewise, a geotechnical resistance will always involve two sets of partial factors: Mn '+' Rn. However, in a number of cases, the factor values in these sets will be equal to unity; this applies, for example, to sets $M1$, $R1$ and $R3$.

Making use of the partial factor values of set $M1$ implies that the design values of the soil parameters are equal to their characteristic values. As a consequence, design geotechnical actions, design values of the effects of actions and design resistances, calculated using the $M1$ set of partial factors, may sometimes, for simplicity, be stated as calculated 'from characteristic values', when the true meaning is that they are calculated 'from design soil parameters with partial factors equal to unity'. Examples of such simplifications may be found in this guide, especially in the examples.

Design Approach 1

The design should be separately checked for failure in the soil *and* in the structure using two combinations of sets of partial factors.

Clause 2.4.7.3.4.2(1)P

The partial factors are applied at the source, i.e. to the representative values of the actions and to the characteristic values of the ground strength parameters (such as c' and tan φ' or c_u) using *expression* (*2.7a*). However, an exception to this is made for the design of pile and anchorage resistances, which are obtained by applying partial resistance factors to measured or calculated resistances using *expression* (*2.7b*).

Clause 2.4.7.3.2(2)

The partial factors are usually applied directly to the representative values of the actions (*expression* (*2.6a*)), except when doing so leads to physically impossible situations (e.g. in the case of factoring the known depth of a free water surface. In such cases, partial factors are applied to the effects of the action; thus, *expression* (*2.6b*) is used (*clause 2.4.7.3.2*(*2*)).

Combination 1. The combination of partial factors used is *A*1 '+' *M*1 '+' *R*1. For most readers familiar with ENV 1997-1, Combination 1 is the old 'Case B' used in that 'trial' version of the code. It aims to provide safe design against unfavourable deviations of the actions, or their effects, from their characteristic values, while the design values of ground properties are equal to their characteristic values. So, for *unfavourable* actions (or their effects) the calculations for Combination 1 are performed using set *A*1 of *Table A.3* of *Annex A* (Fig. 2.6a: recommended values $\gamma_G = 1.35$ and $\gamma_Q = 1.5$); for *favourable* actions, recommended values are $\gamma_G = 1.0$ and $\gamma_Q = 0.0$. For ground resistances, the calculations are performed using set *M*1 of *Table A.4*, and *R*1 of *Tables A.5* to *A.8* and *A.12* to *A.14* (Fig. 2.6a: $\gamma_{\varphi'} = \gamma_{c'} = \gamma_{cu} = 1.0$ and $\gamma_{R,v} = 1.0$).

Combination 2. The combination of partial factors used is *A*2 '+' *M*2 '+' *R*1. Combination 2 was called 'Case C' in ENV 1997-1. It aims to provide safe design against unfavourable deviations of the ground strength properties from their characteristic value and against uncertainties in the calculation model, while it is assumed that the permanent actions are very close to their expected representative values and the variable actions from the structure may deviate slightly in an unfavourable way. So, for actions (or their effects) the calculations for Combination 2 are performed using set *A*2 of *Table A.3* of *Annex A* (Fig. 2.6b:

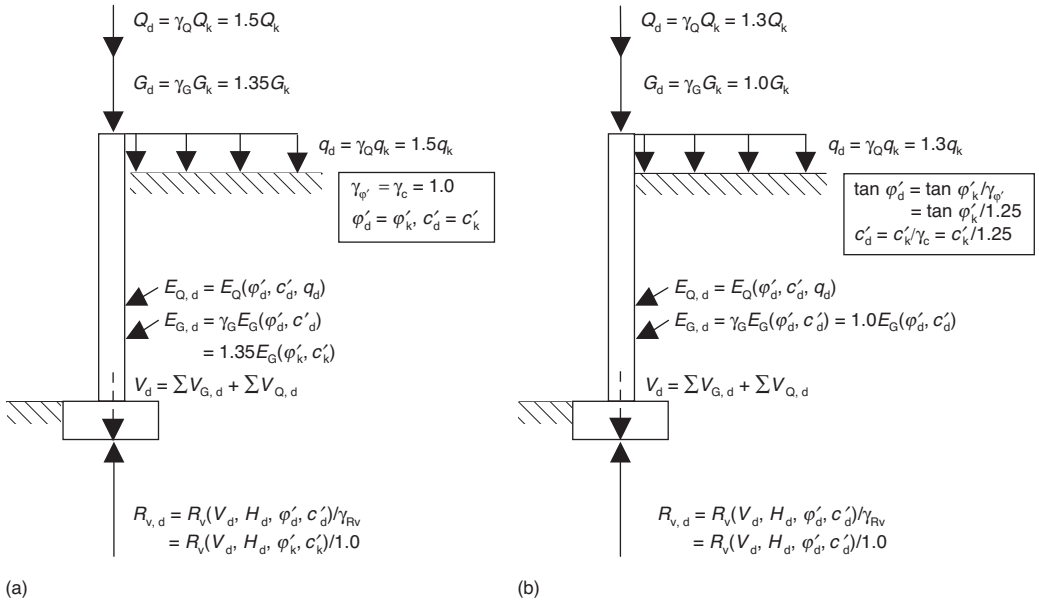

Fig. 2.6. Design Approach 1: introduction of partial factors (recommended values) in the checking of ground bearing capacity using (a) Combination 1 and (b) Combination 2. For simplicity, only vertical equilibrium is considered and only unfavourable actions are shown

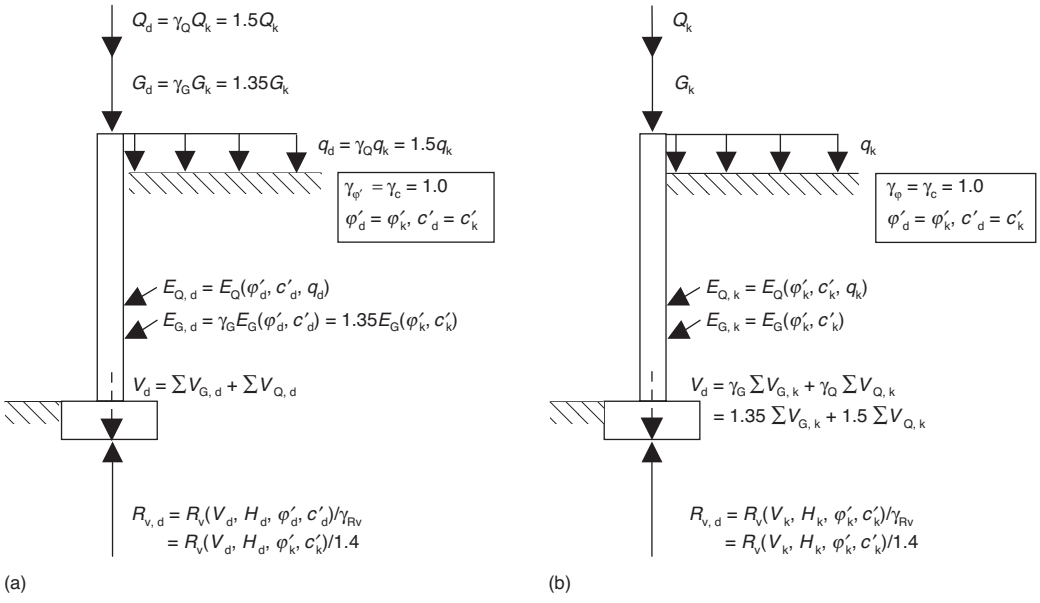

Fig. 2.7. Introduction of partial factors (recommended values) in the checking of ground bearing capacity using Design Approach 2. (a) Factoring actions at the source, Design Approach DA-2. (b) Factoring effects of actions, Design Approach DA-2*. For simplicity, only vertical equilibrium is considered and only unfavourable actions are shown

recommended values $\gamma_G = 1.0$, for both favourable and unfavourable actions, and $\gamma_Q = 1.3$ (unfavourable) and $\gamma_Q = 0.0$ (favourable)). For ground resistances, the calculations are performed using set *M*2 of *Table A.4* and set *R*1 of *Tables A.5* to *A.8* and *A.12* to *A.14* (Fig. 2.6b: recommended values $\gamma_{\varphi'} = \gamma_{c'} = 1.25$, $\gamma_{cu} = 1.4$; $\gamma_{R,v} = 1.0$).

For the design of piles and anchorages, the design value of their resistance is calculated using set *M*1 of *Table A.4* ($\gamma_\varphi = \gamma_c = \gamma_{cu} = 1.0$) and a partial factor ($\gamma_R > 1.0$) from set *R*4 of *Tables A.6* to *A.8* or *A.12*. The design values of the unfavourable actions on the piles or anchorages are calculated using the partial factors of sets *A*2 and *M*2 (see also Chapters 7 and 8). *Clause 2.4.7.3.4.2(2)P*

Where it is obvious that one combination of sets of partial factors governs the design, it is not necessary to perform full calculations for the other combination. Usually, the geotechnical 'sizing' is governed by Combination 2, and the structural design is governed by Combination 1. So, it is often obvious in a first step to determine the size of the geotechnical element using Combination 2 and then simply to check in a second step that this size of element is acceptable using Combination 1; similarly, it is often obvious to determine the structural strength of the resulting element using Combination 2 and, when relevant, to check it for Combination 1.

For further details of Design Approach 1, see Simpson (2000).

Design Approach 2

In Design Approach 2 a single combination of the sets of partial factors is applied to the calculations for the checking of each relevant ultimate limit state in the ground and in the structure. The combination of partial factors *A*1 '+' *M*1' +' *R*2 is used. The same values of the partial factors are applied to geotechnical actions and to actions on/from the structure. Partial factors are applied to the ground resistance and either to the actions (referred to as 'DA-2') or to the effects of actions (referred to as 'DA-2*') (Fig. 2.7). *Clause 2.4.7.3.4.3*

The practical application of and the results for the two ways of applying the partial factors are different.

For the procedure where the actions are factored at their source (DA-2), the factors of set *A*1 of *Table A.3*, set *M*1 of *Table A.4* and set *R*2 of *Tables A.5* to *A.8* and *A.12* to *A.14* are used (Fig 2.7a: recommended values $\gamma_G = 1.35$ and $\gamma_Q = 1.5$; set *M*1, $\gamma_{\varphi'} = \gamma_{c'} = \gamma_{cu} = 1.0$; set *R*2, $\gamma_{R,v} = 1.4$ applied to the bearing resistance).

For the procedure where the partial factors are applied to the effect of actions (DA-2*), the same factors are used but the calculations of *E* and *R* are performed with characteristic values of actions and characteristic values of ground strength parameters. The partial factors (sets *A*1 and *R*2) are applied, at the end, to the resulting effects of permanent and variable characteristic actions (Fig 2.7b: $V_d = 1.35 \times \sum V_{G,k} + 1.5 \times \sum V_{Q,k}$) and to the resistance calculated using the characteristic values of the ground properties (Fig. 2.7b: $R_{v,d} = R_v(\varphi_k', c_k')/1.4$). In this procedure, *expressions* (*B.3.1*) and (*B.6.2.2*) of *Annex B* in EN 1997-1 are used, so that a direct relationship with the traditional overall factor of safety $\eta = R_k/E_k$ can be established thus:

$$E_d \leq R_d$$

is written as

$$\gamma_E E\{F_{rep}, X_k, a_d\} \leq R\{F_{rep}, X_k, a_d\}/\gamma_R$$

so that

$$\eta = \gamma_E \gamma_R$$

It should be noted that γ_E is a compound factor, where the value depends on the proportions of the permanent and variable parts of the action. The product $\gamma_E\gamma_R$ is dependent on this proportion, whereas the overall factor of safety η is usually independent of it.

For further details of Design Approach 2 see Schuppener *et al.* (1998).

Design Approach 3

Clause 2.4.7.3.4.4 In Design Approach 3, a single combination of the sets of partial factors is applied to the calculations for the checking of each relevant ultimate limit state in the ground and in the structure. The combination of partial factors (*A*1 or *A*2) '+' *M*2 '+' *R*3 is used. The characteristic values of actions coming from the structure (structural actions) are multiplied by the factors of set *A*1 in *Table A.3* (Fig. 2.8: recommended values $\gamma_G = 1.35$ and $\gamma_Q = 1.5$) to produce their design values. Design values of actions arising from the ground or transferred through it (geotechnical actions) are assessed using the partial factors on ground strength of set *M*2 and the partial action factors of set *A*2 (Fig. 2.8: recommended values $\gamma_G = 1.0$ and $\gamma_Q = 1.3$). Design values of soil strength parameters are obtained by applying the factors of set *M*2 in *Table A.4* (Fig. 2.8: recommended values $\gamma_{\varphi'} = \gamma_{c'} = 1.25$; $\gamma_{cu} = 1.4$). Design values of the soil resistance are obtained by applying the partial factors from set *M*2 in *Table A.4* to the ground strength parameters and the partial resistance factors of set *R*3 in *Tables A.5* to *A.8* and *A.12* to *A.14* of *Annex A* (Fig. 2.8: set *M*2, recommended values $\gamma_{\varphi'} = \gamma_{c'} = 1.25$, $\gamma_{cu} = 1.4$ and $\gamma_{R,v} = 1.0$).

In all Design Approaches the design values of structural material strength properties are taken from the relevant material code.

Checking procedure and partial factors for the avoidance of uplift

Clause 2.4.7.4(1)P The inequality for the checking of resistance to failure by uplift (UPL) requires that the design value of the destabilizing permanent and variable vertical actions, $V_{dst,d}$, is less than or equal to the sum of the design value of the stabilizing permanent vertical actions, $G_{stb,d}$, and of any additional resistance to uplift, R_d (see *inequality* (*2.8*)). The recommended values for partial factors to be applied in the avoidance of UPL in persistent and transient design situations are given in *Tables A.15* and *A.16* of *Annex A*.

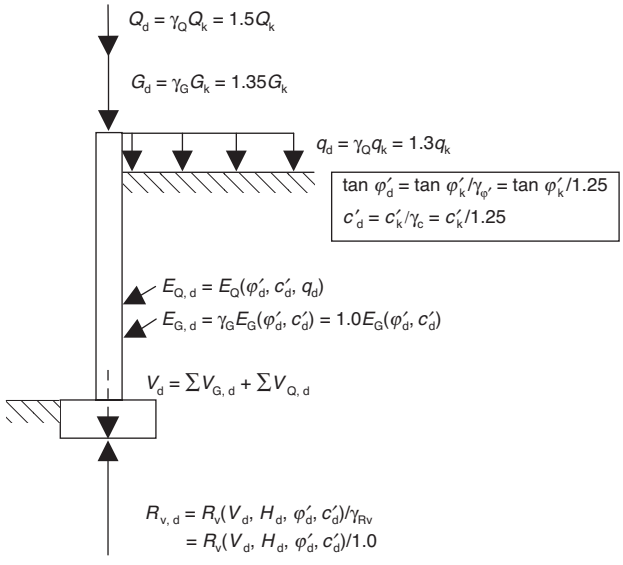

Fig. 2.8. Introduction of partial factors (recommended values) in the checking of ground bearing capacity using Design Approach 3. For simplicity, only vertical equilibrium is considered and only unfavourable actions are shown

Table A.15 is applied to the stabilizing and destabilizing actions. Stabilizing permanent actions are, for example, the weight of the structure and/or of the ground. Water pressures under the structure and any other upward or pull-out forces are destabilizing actions.

Table A.16 is applied to any additional resistance, R_d, to uplift provided by shearing resistance (where this resistance is calculated using shear strength parameters), pile tensile resistance or anchorage resistance.

Alternatively, this resistance may be treated as a stabilizing permanent vertical action $G_{stb,d}$, and *Table A.15* is applied to it (note that, in this case, model factors are also generally introduced). *Clause 2.4.7.4(2)*

Some details of UPL avoidance and measures to resist failure by uplift forces are described in Chapter 10 of this guide (on hydraulic failure) and in Example 7.5, which comprises the UPL checking of a pile foundation for a structure subjected to uplift water pressures.

Checking resistance to failure by heave due to seepage of water in the ground

Checking the resistance to failure by heave due to seepage of water in the ground (HYD) is performed using either stresses or forces as the variables. Considering a column of soil in the ground, through which water percolates vertically upwards, *inequalities* (*2.9a*) and (*2.9b*) require that the design value of the destabilizing total pore pressure at the bottom of the column or the seepage force in the column should not be greater than the stabilizing total vertical stress at the bottom of the column or the buoyant weight of the column, respectively. *Clause 2.4.7.5(1)P*

The recommended values for the partial factors to be applied in HYD checking in persistent and transient design situations are given in *Table A.17* of *Annex A*.

Details of HYD checking and measures to resist failure by heave due to seepage of water are described in Chapter 10 of this guide and in Example 9.2.

2.4.6. Serviceability limit state design

Limit state design requires that the occurrence of serviceability limit states is sufficiently improbable. Serviceability limit states may be checked in two ways:

Table 2.1. Combinations of actions for checking serviceability limit states

Combination	Use according to EN 1990
Characteristic	Irreversible limit states
Frequent	Reversible limit states
Quasi-permanent	Long-term effect and appearance

Clause 2.4.8(1)P

- by calculating the design values of the effects of the actions E_d (deformations, differential settlements, vibrations, etc.) and comparing them with limiting values, C_d, using *inequality* (*2.10*)

Clause 2.4.8(4)

- by a simplified method, based on comparable experience.

Clause 2.4.8(2)

Design values of actions and of material properties for checking the avoidance of serviceability limit states will normally be equal to their characteristic values. In cases where differential settlements are calculated, a combination of upper and lower characteristic values of deformation moduli should be considered, to account for any local variations in the ground properties.

Clause 2.4.9(1)P
Clause 2.4.9(3)P

Ideally, the limiting values of deformations should be specified as design requirements for each supported structure, and the code lists a series of items to take into account when establishing limiting values of movements. It is important that limiting values are established as realistically as possible and in close cooperation with the designer of the structure. Unnecessarily severe values usually lead to uneconomic design. *Annex H* gives some indications of limiting values of differential settlements which can be used as guidelines in the absence of specified limiting values of structural deformations.

Clause 2.4.8(4)

As an alternative to serviceability checks by calculation, it may be shown in a simplified method that a sufficiently low fraction of the ground strength is mobilized to keep deformations within the required serviceability limit (see also *clause 2.4.1*(*4*)). This simplified method requires the existence of comparable experience with similar soil and structure. These requirements clearly restrict the circumstances in which the simplified method may be applied to conventional structures and foundations in familiar ground conditions.

Clause 6.4(5)
Clause 7.6.4.2(1)
Clauses 9.8.2(2)P to 9.8.2(4)P

The simplified method is applied in EN 1997-1 to spread foundations through the indirect method, to pile foundations and to retaining structures. EN 1997-1 gives no indication of what is a 'sufficiently low fraction of ground strength'. Considerable experience exists of applying to the characteristic resistance global safety factors that are sufficiently high to deal implicitly with the avoidance of serviceability limit states. It is probable that similar experience with partial factors will increasingly develop in the future.

EN 1990 (clause 6.5.3) defines three combinations of actions for checking serviceability limit states, and gives a note on their use (Table 2.1).

The combinations differ by the value of the ψ factors (see EN 1990, Annex A (normative), Table A1.1: 'Recommended values of ψ factors for buildings').

EN 1990 refers to the relevant parts of EN 1991 to EN 1997 for more information on rules of application (see the note to clause 6.5.3(4)). Unfortunately, EN 1997-1 does not give this information. It is intended for EN 1990 and EN 1997-1 to apply the combinations for SLS checking as follows:

- When serviceability limit states are checked by applying *inequality* (*2.10*) of *clause 2.4.8*(*1*), the frequent or quasi-permanent combinations are appropriate.
- When serviceability limit states are checked by applying the alternative method given in *clause 2.4.8*(*4*), the characteristic combination is appropriate, as the comparable

experience required for the use of *clause 2.4.8(4)* has been built up with combinations of actions close to the characteristic combination.

2.5. Design by prescriptive measures

Prescriptive measures should be applied in the context defined in EN 1997-1; an example is given in *Annex G*. The partial factors of *Annex A* are not intended to be applied when using prescriptive measures. It should be noted that charts and tables established from comparable experience implicitly contain their own safety factor. A definition of comparable experience is given in EN 1997-1. Very often, the concept of 'allowable stress on the soil' is used in such charts or tables. Here, the comparable experience is related to serviceability limit states, and ultimate limit states are considered to be implicitly covered by the serviceability limit states.

Clause 2.5
Clause 1.5.2.2

Prescriptive measures can be applied in cases where calculation models are not available or not appropriate. Examples of such prescriptive measures are often related to durability (e.g. excess thickness to prevent the effects of corrosion loss) or in rules of good practice (e.g. depth of footings below the frost penetration depth).

2.6. Observational method

EN 1997-1 introduces design by the '*observational method*', in which the design is reviewed in a planned manner during the course of the construction and in response to the monitored performance of the structure. The essence of the method is a precise plan of monitoring and of the actions to be taken as a result of the observations. The minimum requirements to be met before and during construction are indicated. The advantage of this method is that it facilitates design where a precise prediction of the geotechnical behaviour is difficult, e.g. where the ground conditions are complex or not sufficiently well known. The observational method allows 'optimistic' or 'pessimistic' assumptions to be checked by monitoring the actual behaviour.

Clause 2.7

Clauses 2.7(2)P to 2.7(4)P

EN 1997-1 leaves open the manner in which safety is introduced in the supporting calculations. This might be done through reduced values of partial factors or through a less cautious selection of the characteristic values of the soil properties. The way to introduce safety into design when using the observational method is best evaluated for each individual project, depending on the perceived reasons for using factors of safety (uncertainty or displacement control) and on the consequences of 'failure'.

The observational method cannot be applied where a sudden collapse could occur without warning, such as when ground and the interaction between ground and structure are not sufficiently ductile (brittle behaviour).

2.7. Geotechnical Design Report

The design assumptions, data, methods of calculation and results of the checking of safety and serviceability should be recorded in a Geotechnical Design Report (GDR) for all geotechnical designs, including small and relatively simple structures in straightforward ground conditions. The level of detail may vary greatly. For simple designs, a single-sheet report may be sufficient (Fig. 2.9). A checklist of items which should normally be included in the GDR is given in EN 1997-1. The two most important parts of the GDR are:

Clause 2.8(1)P
Clause 2.8(2)
Clauses 2.8(3)
Clause 2.8(4)P

- the Ground Investigation Report (see Chapter 3 of this guide)
- a plan for appropriate supervision and monitoring (see Chapter 4 of this guide).

A checklist is given of the items to be covered in the plan for supervision and monitoring. *Clause 2.8(5)*

Job Title 'New start housing development Structure Reference: Strip foundations	Job No.	Sheet no of.....
	Made by:	Date .....
	Checked by:	Date .....
	Approved by:	Date .....

Reports used:
Ground Investigation report (give ref. date)
Factual:

Bloggs Investigations Ltd report ABC/123 dated 21 Feb 95

Interpretation:

Ditto

Codes and standards used (level of acceptable risk)

Eurocode 7
Local building regs

Description of site surroundings:

Formerly agricultural land.
Gently sloping (4°)

Section through structure showing actions:

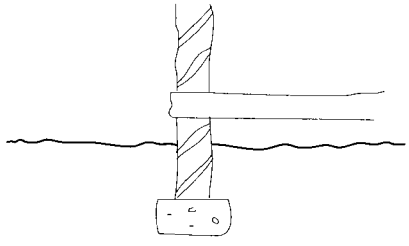

Assumed stratigraphy used in design with properties:

Topsoil and very weathered glacial till up to 1 m thick, overlying firm to stiff glacial till (c_u 60 kPa on pocket penetrometer).

Calculations (or index to calculations)

Characteristic load 60 kN/m.
Local experience plus Local Building Regulations (ref .....) indicates working bearing pressure of 100 kPa acceptable.
Therefore adopt footings 0.6 m wide, minimum depth 0.5 m (Building Regs) but depth varies to reach c_u 60 kPa – test on site.

Information to be verified during construction.
Notes on maintenance and monitoring.

Concrete cast on un-softened glacial till with c_u 60 kPa (pocket penetrometer)

Fig. 2.9. Single-sheet GDR. (After Simpson and Driscoll, 1998)

Example 2.1: selection of a characteristic value using statistical methods

Description of the problem

This example illustrates how the characteristic value of the drained shear strength parameters φ'_k and c'_k can be selected from the sets of values obtained from triaxial tests.

The ultimate limit state of an embedded retaining wall is considered. This ultimate limit state involves a large volume of soil. The characteristic value of the shear strength parameters is then a cautious estimate of their mean value. In this example, it is assumed that the variations of the shear strength are random, without significant local weaker zones and without significant trend with depth.

The calculations are performed using the statistical formulae given in the appendix to this chapter; different cases are treated with the corresponding statistical method and their results are compared:

(1) There is no information available other than the results obtained from the triaxial test results on four local samples from boreholes located on the site (local sampling). Complementary to the results, it is assumed that there is reliable knowledge of the variability of c' and tan φ' through their coefficients of variation.
(2) Instead of analysing c' and tan φ' separately, an analysis is performed on the shear resistance using t as a linear function of s': the characteristic mean value at the 95% confidence level for a linear trend between t and s' is determined, from which the values of c'_k and tan φ'_k can be obtained.

Note:

$$s' = (\sigma'_v + \sigma'_h)/2 \qquad t = (\sigma'_v - \sigma'_h)/2 \qquad \sin \varphi'_k = \Delta t/\Delta s' \qquad c' = t(0)/\cos \varphi'$$

Evaluation using results of φ' and c' from tests with local samples only (case 'V_X unknown')

As only the information obtained from the results of the triaxial test is used in this first calculation, the method outlined in the appendix to this chapter is applied for homogeneous soil without significant trend and the case 'V_X unknown'. Table 2.2 gives the mean value and the standard deviation of the values of c' and tan φ' estimated from the four triaxial test results.

From Table 2.2 the characteristic value of tan φ' is calculated using equation (D2.1). For a characteristic value having a reliability of 95%, Table 2.5 in the appendix (on the basis of four tests, $n = 4$, and 'V_X unknown') gives $k_{n,\,\mathrm{mean}} = 1.18$:

$$\begin{aligned}\tan \varphi'_k &= (\tan \varphi')_{\mathrm{mean}}(1 - k_{n,\,\mathrm{mean}} V_{\tan \varphi}) \\ &= 0.603 \times (1 - 1.18 \times 0.118) = 0.519\end{aligned}$$

$$\varphi'_k = 27.5°$$

Table 2.2. Mean values of c' and tan φ', their standard deviation and coefficient of variation obtained from four triaxial test results

	c' (kPa)	φ' (°)	tan φ' (–)
Borehole/test			
BH 1/1	3	31	0.601
BH 1/2	4	30	0.577
BH 2/1	1	35	0.700
BH 2/2	7	28	0.532
Statistical results			
Mean value	$c_{\mathrm{mean}} = 3.75$		$(\tan \varphi')_{\mathrm{mean}} = 0.603$
Standard deviation	$\sigma_c = 2.50$		$\sigma_\varphi = 0.071$
Coefficient of variation	$V_c = 0.667$		$V_{\tan \varphi} = 0.118$

The calculation for the characteristic value of c'_k gives

$$c'_k = c_{mean}(1 - k_{n,\,mean}V_c)$$
$$= 3.75 \times (1 - 1.18 \times 0.667)$$
$$= 0.8 \text{ kPa}$$

In Fig. 2.10 the corresponding Mohr's envelope is presented together with the results of the triaxial tests (values of t and s' at failure).

Evaluation using results of φ' and c′ assuming 'V$_X$ known'

It should be noted that the use of 'V_X known' is new and has not yet gained general acceptance in the geotechnical engineering profession. The method is presented here because it may be of some help to the engineer; but it should be used with caution.

Schneider (1999), using results from Rethati (1998) and Lumb (1974), presents typical values for the coefficient of variation V_X for soil properties, which are generally valid and of which the magnitudes have been confirmed by many researchers world-wide. Typical values of V_X for the tangent of the angle of shearing resistance and for the cohesion range from 0.05 to 0.15 and 0.3 to 0.5, respectively. Schneider (1999) recommends average values of $V_X = 0.1$ for the angle of internal friction and $V_X = 0.4$ for cohesion. These values are used to select the characteristic mean values with a reliability of 95% for tan φ' and c' from the four tests results, applying the case 'V_X known'.

When four tests results are available ($n = 4$) Table 2.6 in the appendix gives: $k_{n,\,mean} = 0.82$ for 'V_X known'. Using equation (D2.1) the characteristic value tan φ'_k is

$$\tan \varphi'_k = (\tan \varphi')_{mean}(1 - k_{n,\,mean}V_{\tan \varphi})$$
$$= 0.603 \times (1 - 0.82 \times 0.10) = 0.554$$
$$\varphi'_k = 29°$$

Similarly, the characteristic value c'_k can be calculated using equation (D2.1):

$$c'_k = c_{mean}(1 - k_{n,\,mean}V_c)$$
$$= 3.75 \times (1 - 0.82 \times 0.4)$$
$$= 2.5 \text{ kPa}$$

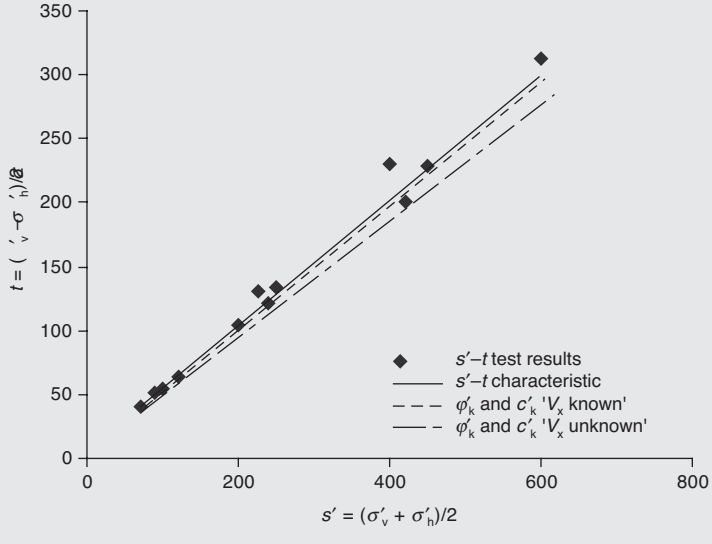

Fig. 2.10. Results of triaxial tests and their statistical evaluations with respect to Mohr´s envelopes for the characteristic shear parameters

Table 2.3. Statistical analysis of the values of t as a function of s' according to equations (D2.2) and (D2.3) in the appendix to this chapter

Test results		Statistical analysis			
s' (kPa)	t (kPa)	$t^*(s')$ from linear regression (kPa)	s_1 (kPa)	$t^{0.95}_{(n-2)}s_1$ (kPa)	$t_k = t^* - t^{0.95}_{(n-2)}s_1$ (kPa)
70.0	40.0	40.8	4.5	8.2	32.6
90.0	52.0	51.0	4.2	7.7	43.3
100.0	55.0	56.1	4.1	7.5	48.6
120.0	64.0	66.3	3.9	7.0	59.3
200.0	105.0	107.0	3.1	5.6	101.4
225.0	130.0	119.8	3.0	5.4	114.4
240.0	121.0	127.4	2.9	5.3	122.1
250.0	134.0	132.5	2.9	5.3	127.2
400.0	231.0	208.9	3.8	6.9	202.0
420.0	201.0	219.1	4.0	7.3	211.8
450.0	229.0	234.3	4.4	8.0	226.3
600.0	312.0	310.7	6.7	12.1	298.6

Coefficients of linear regression:
Intercept: $c' = 5.2$ kPa
Slope: $\sin \varphi' = 0.51$, $\varphi' = 30.5°$

In Fig. 2.10 the corresponding Mohr's envelope is presented together with the results of the triaxial tests (values of t and s' at failure).

Evaluation using the values of s′ and t at failure

In the analysis above, c' and $\tan \varphi'$ have been analysed separately. However, one observes that they are negatively correlated, i.e. the larger c' values correspond to the smaller φ', and vice versa. Analysing c' and $\tan \varphi'$ separately is conservative. Starting from the assumption of a linear relation between effective normal stress s' and shear strength t, one can, alternatively, plot all s'–t points obtained from the triaxial tests (see Fig. 2.10) and determine the characteristic value of the angle of shearing resistance, φ'_k, by using the method for local sampling, with a linear trend of the shear strength t with s'.

Equation (D2.3) permits the determination of the characteristic value t_k as a function of s', and this is applied in Table 2.3, where the parameter z stands for s' and parameter X_k stands for t_k. The factor $t^{0.95}_{(n-2)}$ is determined using Table 2.6 of the appendix, which, for $n = 12$ test results and $r = n - 2 = 10$, gives $t^{0.95}_{(n-2)} = 1.812$. Table 2.3 indicates the parameter values for linear regression through the measured s' and t values (zero intercept and slope of the linear regression of t^* for s'), the value of the term s_1 (applying equation (D2.2)) and the characteristic value t_k as a function of s'. It should be noted that the relationship between s' and t_k is slightly hyperbolic due to the non-linear term s_1. The distance between the linear regression and the characteristic value is smallest in the middle of the stress interval and increases slightly towards its beginning and end.

The characteristic values of c'_k and $\tan \varphi'_k$ may be deduced by linearizing the relation s'–t_k in the stress interval relevant for the problem. As $\sin \varphi' = \Delta t/\Delta s'$ and $c' = t(s' = 0)/\cos \varphi'$, for the stress interval s' between 200 and 500 kPa (see Fig. 2.10):

$$\tan \varphi'_k = 0.5$$

$$\varphi'_k = 30°$$

$$c'_k = 1 \text{ kPa}$$

Table 2.4. Summary of statistical evaluations of the results of the triaxial tests

Basis and method of statistical evaluation	Characteristic values of shear parameters	
	φ'_k (°)	c'_k (kPa)
φ' and c' of four tests for the case 'V_X unknown'	27.5	0.8
φ' and c' of four tests for the case 'V_X known'	29.0	2.5
Schneider (1999)	29.5	2.5
Evaluation of values of s' and t of 12 tests	30.0	1.0

In the present example, the characteristic value is close to the linear regression line through all the s'–t values. This is due to the fact that the results show quite small variability.

Discussion

A summary of the statistical evaluations of the characteristic values of the shear strength parameters φ'_k and c'_k is presented in Fig 2.10 and Table 2.4. The characteristic values based on local test results for φ' and c', without any further knowledge (case 'V_X unknown'), are in this example close to the smallest values of the test results (see Table 2.2). This is due to the small number of samples and the rather large variability of the tests results, especially for c'.

The introduction of knowledge of the coefficient of variation V_X (case 'V_X known') has significant influence on the calculated characteristic value. The introduction of complementary information is especially relevant when few test results are available or when the variability is rather large.

Schneider (1999) proposed the following simplified equation, based on the assumption that there is always certain knowledge of the coefficient of variation of the soil parameters:

$$X_k = X_{mean} - 0.5s$$

where X_{mean} and the standard deviation s are deduced from values for the local samples. Application of Schneider's equation to the values of Table 2.2 yields results that are in close agreement with the values obtained for the case 'V_X known'.

The analysis of c' and tan φ' as independent variables is generally over-conservative for evaluating the characteristic shear resistance of the soil. When c' and tan φ' are not correlated, advantage can be taken from an analysis where all results are treated together in an s'–t linear relation.

Appendix: an example of the use of statistical methods to assess characteristic values

General

The statistical determination of a material property is introduced in Annex D (informative) of EN 1990, 'Basis of structural design'. Statistical terms and techniques are explained in Appendix C of the *Designers' Guide to EN 1990*, and are not repeated here. Appendix C also gives detailed information on the way characteristic values can be estimated as a fractile, according to the recommendations of EN 1990.

The main difference between a characteristic value of a property of a structural material and of the ground is that, in the former, the characteristic value is often defined as a (5%) fractile while in the latter the characteristic value is usually an estimate of the mean value

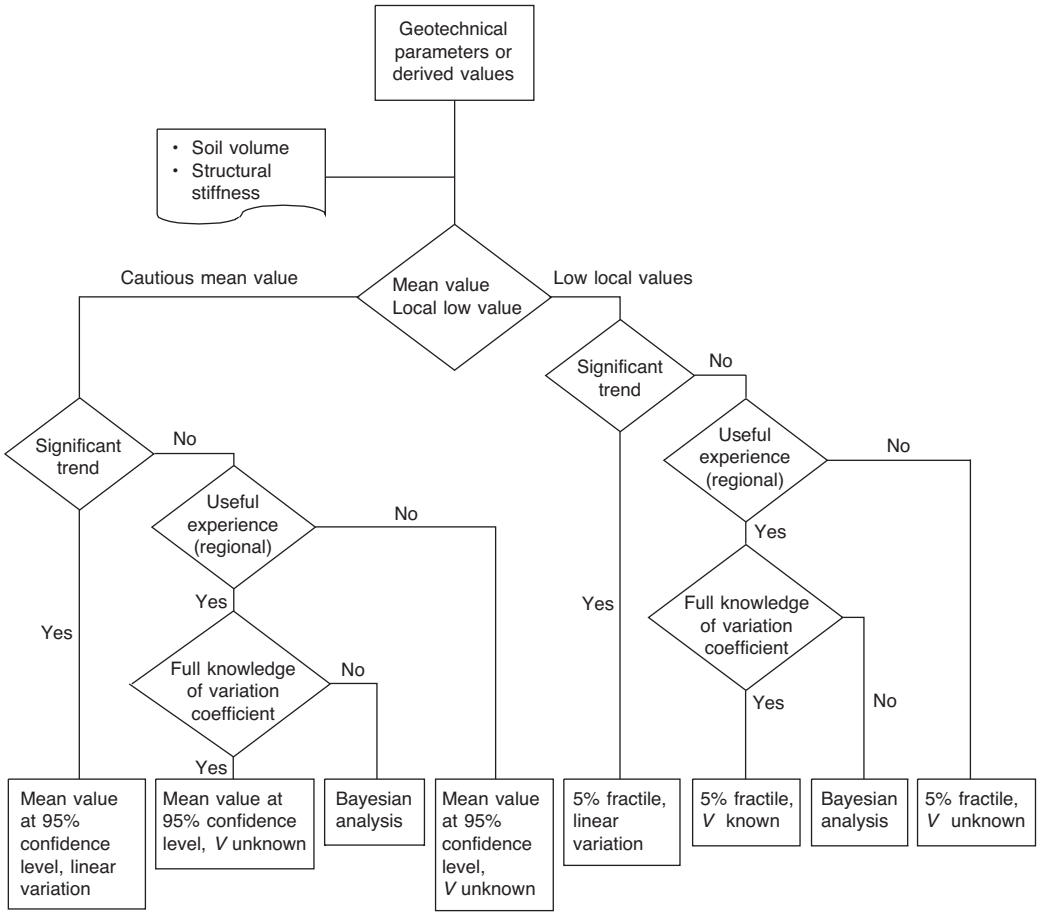

Fig. 2.11. Flow chart to formulae for the assessment of characteristic value of a ground property, starting from a local sampling programme.

with a probability of 95% that the mean value governing the occurrence of a limit state in the ground is more favourable than the characteristic value. This appendix can be considered as an extension of Annex D (informative) of EN 1990 for the selection of characteristic ground property values for geotechnical design; this appendix also complements Chapter 10 of this guide and Appendix C of the *Designers' Guide to EN 1990*.

Statistical methods to assess characteristic values of ground parameters should take into account:

- the type (local and regional) and extent (number of results) of the sample population and the related statistical uncertainty
- the variability of the sample test results, the rate of value fluctuation in relation to the ground volume sampled and the ability of the structure to redistribute loads
- significant trends in the sample test results
- the prior, statistically quantified parameter knowledge, if available
- the required level of confidence in the characteristic value.

The flow chart in Fig. 2.11 brings together all the major items affecting the selection of the characteristic value of a ground parameter, starting from a local sampling programme (i.e. the test results are obtained from tests at the site considered) in homogeneous soil, supplemented by complementary information, if any. The path leads to appropriate statistical formulations for the assessment of characteristic values relevant for current daily practice. Statistical formulae for some simple cases, corresponding to some of the bottom

blocks of the flow chart, will be given in the following sections. Bayesian analysis is not treated further.

The statistical formulae are valid for 'homogeneous' soil. The formulae assume a normal distribution of the value of the geotechnical parameter. They can also be applied to log-normally distributed parameters by applying the formulae after transforming the parameter value X to its logarithm in $Y = \ln X$. For processes governed by extreme values of soil properties, analysis of a sample consisting of only the extreme values is much more appropriate than an analysis based on all the values of test results.

Homogeneous soil with local sampling and without a significant trend in the ground parameter

A normal distribution of the value of the geotechnical parameter can be assumed, although this assumption is not always valid; in some cases, a log-normal distribution is preferred, especially when the coefficient of variation is large.

For soil layers where the geotechnical parameter does not show a significant, systematic trend in either the horizontal direction or with depth, the characteristic value X_k of the parameter can be assessed from a set of individual parameter values according to

$$X_k = X_{mean}(1 - k_n V_X) \tag{D2.1}$$

where

X_{mean} is the arithmetical mean value of the individual sample parameter values

$= \sum X_i/n$

V_X is the coefficient of variation of the parameter X

k_n is a statistical coefficient taking account of the following:

- the number of test results (n) of the sample;
- the volume of ground involved in the limit state in question, related to length of the fluctuations (often denoted 'auto-correlation length') of the material property;
- the type of sample population: local sample only or local sample together with relevant experience in the soil layer considered;
- the statistical level of confidence required for the assessed characteristic value.

Two extreme situations may be considered for the coefficient of variation V_X:

(1) V_X is not known *a priori* but must be estimated from the n test results of the local sample only. This case is denoted as 'V_X unknown'. The value of V_X to be introduced in equation (D2.1) is estimated as:

$$V_X = s_X/X_{mean}$$

where s_X is the standard deviation of the n sample test results:

$$s_X^2 = \frac{1}{n-1}\sum(X_i - X_{mean})^2$$

(2) The coefficient of variation V_X is known *a priori*. This case is denoted as 'V_X known'. *A priori* knowledge can be found from the evaluation of previous tests, from databases or from published tables of coefficients of variations of ground properties in comparable situations; a 'comparable situation' is determined by engineering judgement (see also *clause 1.5.2.2*). In this case, the value of V_X in equation (D2.1) is the *a priori* known value, and does not relate to the sample. X_{mean} is the sample mean value.

In practice, there is often some prior knowledge of the coefficient of variation; it is recommended (see also EN 1990) to use 'V_X known' together with a conservative upper estimate of V_X rather than applying the rules given for 'V_X unknown'. As the number of

Table 2.5. Values of the coefficient $k_{n,\,\text{mean}}$ for the assessment of a characteristic value as a 95% reliable mean value

n	V_X unknown	V_X known
3	1.69	0.95
4	1.18	0.82
5	0.95	0.74
6	0.82	0.67
8	0.67	0.58
10	0.58	0.52
20	0.39	0.37
30	0.31	0.30
∞	0	0
k_n	$k_{n,\,\text{mean}} = t_{n-1}^{0.95}\sqrt{\frac{1}{n}}$	$k_{n,\,\text{mean}} = 1.64\sqrt{\frac{1}{n}}$

Table 2.6. Values of the t factor of Student's distribution

	t_{n-1} and t_{n-2}	
r	p = 95%	p = 90%
2	2.920	1.886
3	2.353	1.638
4	2.132	1.533
5	2.015	1.476
6	1.943	1.440
7	1.895	1.415
8	1.860	1.397
9	1.833	1.383
10	1.812	1.372
12	1.782	1.356
15	1.753	1.341
20	1.725	1.325
25	1.708	1.316
30	1.686	1.310
∞	1.645	1.282

test results is usually small in geotechnical design, advantage should be taken of *a priori* information whenever possible.

When the soil volume involved in the limit state considered is very large compared with the length of the fluctuations (auto-correlation length) of the soil property, and when it may therefore be assumed that the behaviour is governed by the mean value of the ground parameter, the characteristic value should be a cautious estimate of the mean value. In this case the characteristic value $X_{\text{c, mean}}$ represents an estimated value corresponding to a 95% confidence level that the (unknown) mean value of the population governing the occurrence of a limit state in the ground is more favourable than the calculated characteristic value X_{k} derived from the sample and previous knowledge.

The basic equations for the cases 'V_X unknown' and 'V_X known' are equation (D21) and equation (D20), respectively, in Appendix C of the *Designers' Guide to EN 1990*. The corresponding values of $k_{n,\,\text{mean}}$ to be used in equation (D2.1) are given in Table 2.5 for the case 'V_X unknown' (second column) and for the case 'V_X known' (third column). The last row in Table 2.5 gives the full equation for k_n.

The factor $t_{n-1}^{0.95}$ is the t factor of Student's distribution with $n - 1$ degrees of freedom and confidence of 95%, tabulated in Table 2.6. The values t_{n-1} and t_{n-2} can be read from Table

Table 2.7. Values of the coefficient $k_{n,\,\mathrm{low}}$ for the assessment of a characteristic value as a 5% fractile

n	V_X unknown	V_X known
3	3.37	1.89
4	2.63	1.83
5	2.33	1.80
6	2.18	1.77
8	2.00	1.74
10	1.92	1.72
20	1.76	1.68
30	1.73	1.67
∞	1.64	1.64
k_n	$k_{n,\,\mathrm{low}} = t_{n-1}^{0.95}\sqrt{\frac{1}{n}+1}$	$k_{n,\,\mathrm{low}} = 1.64\sqrt{\frac{1}{n}+1}$

Table 2.8. Overview of cases and the values of the coefficient k_n to apply

Characteristic value looked for	Statistical formulation	Coefficient of variation: Estimated from results of the sample only: case 'V_X unknown'	Coefficient of variation: Known from published data: case 'V_X known'
Cautious estimate of the mean value	95% reliable estimate of the mean value	$k_{n,\,\mathrm{mean}}$	$k_{n,\,\mathrm{mean}}$
Cautious estimate of the low local value in the ground	5% fractile	$k_{n,\,\mathrm{low}}$	$k_{n,\,\mathrm{low}}$

2.6, putting $r = n - 1$ and $r = n - 2$, respectively. The values are given for $p = 95\%$ (for 95% reliable mean value and 5% fractile) and for $p = 90\%$ (for 90% reliable mean value and 10% fractile).

When the soil volume involved in the limit state considered is very small compared with the length of the fluctuations of the soil property, or when it may be assumed that the behaviour is governed by the local low value, the characteristic value X_{low} should be selected as a 5% fractile. In this case, there will be only 5% probability that somewhere in the layer considered there is an element of soil having property values lower than the characteristic value. The values of $k_{n,\,\mathrm{low}}$ to be used in equation (D2.1) are given in Table 2.7 for the case where the coefficient of variation is unknown (second column) and for the case where the coefficient of variation is known (third column). (Tables from EN 1990, Annex D (informative), Table D1; see also *Designers' Guide to EN 1990*, Appendix C, equations (D37) and (D38) and Tables 2 and 3).

Table 2.8 summarizes the different cases and indicates which value of the coefficient k_n to apply.

'Large' and 'small' soil volumes are related to the auto-correlation length of the parameter; this is the length over which the value of the parameter does not vary significantly (the rate of fluctuation). When the auto-correlation length is small compared with the dimensions of the soil volume, low and high local values compensate. When the auto-correlation length is large compared with the dimension of the soil volume involved in the limit state, a large part of the soil is possibly located in the weaker part; hence a 'mean' value might be too optimistic. A characteristic value somewhere between the 5% fractile and the 95% reliable mean value may be selected.

When ground shows marked strain softening behaviour or brittle failure, statistics should be used cautiously when selecting the characteristic value of the strength: when the strength is exceeded locally there is a local loss of any resistance. Due to the absence of ductility, 'averaging' of weak and strong spots is limited or even does not occur, and the characteristic value is usually determined to be close to the lowest values of the test results.

Comment on introducing 'previous knowledge' by applying the formulae for 'V_X known'

The formulae for the case 'V_X known' assume that there is no prior knowledge about the value of the mean and that there is full knowledge of the coefficient of variation. These assumptions are usually valid for geotechnical parameters because:

- the mean value of a soil property may fluctuate significantly from one site to another
- the value of the coefficient of variation of a soil property has been found by many researchers world-wide to lie within narrow ranges (e.g. see Schneider, 1999) – which means that the coefficient of variation can be estimated from published tables, databases, etc., and can be applied to the parameter values found at the site.

Thus, it is assumed that, even if the mean value and the standard deviations are unknown, the coefficient of variation may be known. This implies that:

- the characteristic mean value (or fractile) at a given site is merely governed by the estimate of the mean value on that site through the sample mean, and not by some overall 'known mean value' from, for example, a database
- the (estimate of) the standard deviation s_X of the sample at a given site is not introduced in the calculation of the characteristic value, but is assumed to be related to the estimate of the mean value on that site through the 'overall' coefficient of variation, of which the value is known from previous knowledge.

When analysing the local geotechnical data, care should be taken if there is strong and clear evidence that the standard deviation s_X of the parameter X on the site differs significantly from the standard deviation ($V_{X,\,\text{known}}X_{\text{mean}}$) obtained with the *a priori* known 'overall' coefficient of variation $V_{X,\,\text{known}}$ and the mean value X_{mean}.

Comment on characteristic values of ground parameters when a high value is unfavourable

In some design situations, high values of the ground parameters may be unfavourable. In such cases, the characteristic values can be assessed by using equation (D2.1) in which the term $(1 - k_n V_X)$ is replaced by the term $(1 + k_n V_X)$:

$$X_{\text{k}} = X_{\text{mean}}(1 + k_n V_X)$$

Comment on log-normal distributions

The very common normal distribution may often be used to approximate many symmetrical bell-shaped distributions. Adopting a log-normal distribution (if a parameter X is log-normally distributed then $Y = \ln X$ becomes normally distributed) has the advantage that no negative value can occur, which is physically correct. If a log-normal distribution is adopted, the formulae above may be used, with $Y = \ln X$ being introduced instead of X. More details can be found in EN 1990, Annex D (clause D7.2(3), note 2), and in the *Designers' Guide to EN 1990*, Chapter 4 (Appendix 2) and Appendix C. The k_n values are those of Table 2.5 or Table 2.7.

Homogeneous soil, with local sampling and a linear trend in the ground parameters

The characteristic mean value X_{k} at the 95% confidence level for a linear trend can be derived from the best estimate (x) of the ground parameter at a depth (z) following Student's t distribution with $(n - 2)$ degrees of freedom, a mean value equal to the true mean of the ground parameter at this depth, and a standard deviation from

$$s_1 = \sqrt{\frac{1}{n-2}\left(\frac{1}{n}+\frac{(z-\bar{z})^2}{\sum_{i=1}^{n}(z_i-\bar{z})^2}\right)\sum_{i=1}^{n}[(x_i-\bar{x})-b(z_i-\bar{z})]^2} \tag{D2.2}$$

Thus, the characteristic of the mean value of (X) at depth (z) is

$$X_{\mathrm{k}} = [\bar{x}+b(z-\bar{z})]-t_{n-2}^{0.95}s_1 \tag{D2.3}$$

$x^* = \bar{x}+b(z-\bar{z})$: linear regression

where

$$\bar{x} = \frac{1}{n}(x_1+x_2+\ldots+x_n)$$

$$\bar{z} = \frac{1}{n}(z_1+z_2+\ldots+z_n)$$

$$b = \frac{\sum_{i=1}^{n}(x_i-\bar{x})(z_i-\bar{z})}{\sum_{i=1}^{n}(z_i-\bar{z})^2}$$

The calculated characteristic values are no longer linear functions of depth but hyperbolic functions, due to the term $t_{n-2}^{0.95}s_1$. For t_{n-2} values, see Table 2.6.

The distance between the linear regression and the characteristic value is smallest at the centre of gravity of the measurements $\bar{x}$ and increases towards the beginning and the end of the interval of the measurements. This indicates the advantage of performing tests in the relevant problem interval and slightly outside it.

As many calculation methods and computer programs use linear relationships, one has to linearize the hyperbolic relation for X_{k} in the relevant problem stress interval. Errors involved with that linearization are usually small.

For the local low value, the 5% fractile can be derived from the difference between the local value of the ground parameter and its best estimate at a depth (z), following Student's t distribution with (n – 2) degrees of freedom, mean value equal to zero and standard deviation:

$$s_2 = \sqrt{\frac{1}{n-2}\left(1+\frac{1}{n}+\frac{(z-\bar{z})^2}{\sum_{i=1}^{n}(z_i-\bar{z})^2}\right)\sum_{i=1}^{n}[(x_i-\bar{x})-b(z_i-\bar{z})]^2} \tag{D2.4}$$

Thus, the characteristic of the local value of (X) at depth (z) is

$$X_{\mathrm{k}} = [\bar{x}+b(z-\bar{z})]-t_{n-2}^{0.95}s_2$$

In some situations, one can apply statistical formulae directly to the parameters of the regression line (zero intercept or slope, or both). Thus, instead of applying equations (D2.2) or (D2.4) and (D2.3) above, the linear regression line can be treated statistically as a whole. These methods allow the imposition of some conditions to the linear regression line; such conditions can, for example, result from previous experience (e.g. condition on the slope, or condition on the zero intercept). Formulations can be found in Van Aalboom and Mengé (1999).

The example on p. 41 of this guide illustrates the application of equations (D2.3) and (D2.2) to the results of triaxial tests.

Regional sampling

Characteristic values can also be deduced from regional samples. This is beyond the scope of this guide, but an introduction can be found in Bauduin (2002a).

CHAPTER 3

Geotechnical data

This chapter is concerned with the acquisition, evaluation, assessment and reporting of geotechnical data. The structure of the chapter follows that of *Section 3* of EN 1997-1:

3.1. Introduction

The reliability of every geotechnical design depends on the quality of the geotechnical investigations and the correct interpretation of the data obtained. Hence, *Section 3* of EN 1997-1, which provides the general requirements for planning geotechnical investigations and assessing geotechnical parameter values, emphasizes that the careful collection, recording and interpretation of geotechnical information must always be undertaken. The specific requirements for field and laboratory tests and for the determination of derived geotechnical parameter values from these are provided in EN 1997-2. The concept of derived geotechnical parameter values, which is introduced in Part 2 of the code, is explained in this chapter.

Clause 3.1(1)P

Clause 3.1(4)

As EN 1997-1 is a standard for geotechnical design, it does not provide standards for field or laboratory tests. Standards for the most common geotechnical field and laboratory tests, for the identification and classification of soils and for the identification and description of rock, are being prepared by CEN Technical Committee 341 and ISO Technical Committee 182, as noted in Section 1.2 of this guide. Designs to EN 1997-1 should be based on geotechnical data obtained from tests carried out and reported generally in accordance with internationally recognized standards and recommendations.

Clause 3.1(3)P

3.2. Geotechnical investigations

EN 1997-2 defines the following hierarchy of investigations:

- geotechnical investigations, which are ground investigations and other information about the site
- ground investigations, which are field investigations, laboratory testing and desk studies of geotechnical and geological information
- field investigations, which are direct investigations (drilling, sampling and trial pits) and indirect investigations (*in situ* tests, such as the cone penetrometer test (CPT)).

Clause 3.2.1(1)P As stated in *clause 3.2.1(1)P*, geotechnical investigations must provide sufficient data concerning the ground and groundwater conditions at, and around, the site to enable a proper description of the essential ground properties and a reliable assessment of the characteristic values of the geotechnical parameters to be used in design calculations. Hence, Eurocode 7 – Part 2 states that the objectives of ground investigations are to provide a full description of all ground conditions relevant to the proposed works and to establish the
Clause 3.2.1(4) relevant geotechnical parameters. The character and extent of a geotechnical investigation depend on the complexity of the ground conditions. When geotechnical categories are being used, the ground conditions should be determined as early as possible as these are related to, and may affect, the choice of geotechnical category. Three phases of geotechnical investigation are considered in EN 1997-1:

- preliminary investigations
- design investigations
- control investigations.

Preliminary investigations

Clause 3.2.2(1)P Preliminary investigations are investigations carried out during the planning or feasibility stage of a project with the objective to assess the general suitability of a site, compare alternative sites, if relevant, plan the design and control investigations, and identify borrow areas, if relevant. Preliminary investigations normally include:

- desk studies of geotechnical and geological information about the ground conditions, including reports of previous investigations in the vicinity
- field reconnaissance (walk-over surveys)
- *Clause 3.2.3(1)P* consideration of construction experience in the vicinity.

Design investigations

Design investigations are the main geotechnical investigations carried out to obtain the geotechnical data required for an adequate design of both the temporary and permanent
Clause 3.2.3(6)P works. Design investigations are also carried out to provide the information required for construction and to identify any difficulties that may arise during construction. Design investigations normally include *in situ* testing and sampling of the ground for laboratory tests. Design investigations should be carried out at least through all the formations which are considered likely to be relevant to the particular design. Some guidance on the spacing and depth of investigations is provided in EN 1997-2.

Control investigations

Control investigations are inspections carried out during the construction phase of a project
Clause 4.2.2(1)P to check and compare the actual ground conditions encountered with those assumed in the design. The clauses in Section 3 are only concerned with preliminary and design
Clause 4.2.3(1)P investigations; there are no clauses in this section concerned with control investigations. The general requirements for inspections during construction are presented in Section 4, and include the need to inspect the ground on a continuous basis and the need to record the results of the inspections. In control investigations, additional tests may need to be carried out to test that the ground conditions encountered, the quality of delivered construction materials and the construction work correspond to those assumed in the design. The design must then be assessed on the basis of the results of the inspections and the tests.

3.3. Evaluation of geotechnical parameters

3.3.1. General

Clause 2.4.3(1)P According to *clause 2.4.3(1)P*, the properties of soil and rock masses for use in design calculations are quantified by geotechnical parameters, which are obtained from test results,

either directly or through correlation, theory or empiricism, and from other relevant data. *Clause 3.3* presents the general requirements for assessing geotechnical parameters from the most commonly used laboratory and field tests. Further requirements for evaluating geotechnical parameters from particular tests are given in EN 1997-2. No specific standards for carrying out the different tests are mentioned in EN 1997. Testing standards for the most common soil tests are being prepared by CEN. Other tests may be used, provided that their suitability has been demonstrated through comparable experience.

Clause 3.3.1(1)P

3.3.2. Characterization of soil and rock type

Prior to setting up a test programme to obtain the geotechnical parameters required for a particular design, the stratigraphy of the site should be established. The character and basic constituents of the soil or rock relevant for the design must be identified before the results of other tests are interpreted. The material must be examined, identified and described in accordance with a recognized nomenclature. Soils should be classified and described according to an acknowledged geotechnical classification and description system. No particular geotechnical classification and description system is mentioned in Eurocode 7, but a new international standard, ISO 144688, *Identification and Classification of Soil*, covers this.

Clause 3.3.2(1)P
Clause 3.3.2(2)P
Clause 3.3.2(3)

EN 1997-2 gives the requirements for the use of routine classification tests, which include soil class, water content, density, Atterberg limits, grain size distribution, undrained shear strength and sensitivity. Guidance is offered on the suitability of these routine classification tests for samples of different types of soil and for various degrees of sample disturbance.

3.3.3. Procedure for evaluating geotechnical parameters

The procedure for evaluating the design values of geotechnical parameters from the results of field and laboratory tests is a three-step procedure, and normally involves proceeding from the measured values obtained from field and laboratory tests to the design values used in calculations, via test results, geotechnical parameter values and characteristic values. The first two steps, including the various aspects that need to be considered and the various factors, such as calibration and correction factors, that need to be applied during these steps in order to obtain the appropriate characteristic value from measured values are shown in Fig. 2.3 in Chapter 2 of this guide, and are discussed below.

Step 1, going from measured values to geotechnical parameter values, is concerned with evaluating and assessing the properties of soil and rock masses at the particular locations of the field tests or laboratory samples, and does not involve taking account of the variability of the soil properties or the design situation. The requirements of Step 1 are covered by *clauses 2.4.3* and *3.3* of EN 1997-1 and by the clauses of EN 1997-2, and are the main concern of this chapter. Steps 2 and 3, going from the geotechnical parameter values to the characteristic value, and from the characteristic value to the design value, involve consideration of the design situation, and are covered by *clauses 2.4.3*, *2.4.5.2* and *2.4.6.2* of EN 1997-1, and are discussed in Chapter 2.

Clause 2.4.3
Clause 3.3
Clause 2.4.3
Clause 2.4.5.2
Clause 2.4.6.2

Measured values and test results

A measured value is defined in EN 1997-2 as a value measured in a test. Often, corrections need to be applied to the measured values in order to obtain the test results used to determine the required geotechnical parameter values. These corrections are test related, and are unrelated to the design situation for which the test results will be used. Examples of test-related corrections are provided in EN 1997-2. One example of a test-related correction is the correction to the stresses measured in triaxial tests to account for the effects of the membrane. Another example is the correction factor applied to the measured blow count, N, in a standard penetration test in sand to account for the energy delivered to the drive rods and for the effect of the overburden pressure.

Examples of test results include:

- the blow count, N, recorded in an standard penetration test
- the limit pressure, p_{LT}, measured in a Ménard pressuremeter test
- the cone penetration resistance, q_c, measured in a CPT
- the stresses, e.g. σ_1' and σ_3', s' and t, or p' and q, and deformations measured in a triaxial test
- the deformations measured in a triaxial test
- the pile bearing resistance, R, measured in a pile load test
- the Atterberg limits obtained from index tests.

Before evaluating the geotechnical parameter values from test results, and in order to interpret them appropriately for the actual limit state being considered, it is necessary to select the test results which are relevant for the design. Depending on the limit state, these may be the peak or constant-volume strength parameters.

Clause 2.4.3(2)P

Directly obtained and derived values

Clause 2.4.3(1)P

As noted in Section 3.3.1 above, *clause 2.4.3(1)P* states that the values of geotechnical parameters are obtained from test results, either directly or through correlation, theory or empiricism, and from other relevant data. An example of a geotechnical parameter value obtained directly from a test result without the use of correlation, theory or empiricism is the pile bearing resistance obtained from a pile load test. In this situation, the geotechnical parameter value is the measured pile resistance. Another example of a geotechnical parameter used in design calculations that is obtained directly from test results, without the use of correlation, theory or empiricism, is the weight density.

Clause 1.5.2.5
Clause 2.4.5.2(1)P

In most design situations, however, geotechnical parameters are obtained from test results using correlation, theory or empiricism. These values are defined in EN 1997-1 as *derived values*, and form the basis for the selection of the characteristic values of geotechnical parameters. The term 'derived value' is hardly used in EN 1997-1, but it has been found useful in EN 1997-2 to describe the geotechnical parameter values obtained from the results of the most common field and laboratory tests using the different correlations, theories, and empirical relationships presented in EN 1997-2.

The use of different types of test can result in different derived values of the same parameter being obtained at the same location. The example is given in EN 1997-2 of different c_u values being obtained by the following three different test methods:

- from CPT test results through correlations with q_c
- from Ménard pressuremeter test results through correlations with p_{LM}
- from laboratory triaxial test results evaluated using Mohr–Coulomb theory.

It should be noted that a derived value is the value of a geotechnical parameter, such as the soil strength, resistance or stiffness, determined from the results of field or laboratory tests on soil or rock at or from one particular point in the ground or from field test measurements at one particular location on a site. It does not take account of the variability of the ground, the scatter of the test results, the number of test results or the design situation, including the volume of ground involved. Examples of derived parameters include:

- c' and φ' values obtained from triaxial test results using Mohr–Coulomb theory
- E_m values obtained from measured triaxial stress-strain curves
- c_u values derived from field vane test values (c_{fv}) using an emperical correction factor
- c_u values derived from index properties using empirical relationships
- φ' and E_m values obtained from standard penetration test blow-counts using correlations
- φ' values obtained from CPT q_c values using correlations
- R (bearing resistance) values obtained from measured p_{LM} values and empirical relationships.

When reporting derived geotechnical values, it is important to clarify how the derived values have been obtained and to state the assumptions made. Also, when using correlations

to determine derived geotechnical parameter values from test results, it is important to determine if the correlation is based on the mean value or on a conservative estimate of the test values. Correlations should preferably relate to mean test results. When conservative correlations are used, an unknown safety margin is introduced. A very cautious correlation should be chosen when using standard tables relating geotechnical parameters to test results.

Assessment of geotechnical parameter values

Clause 2.4.3(3)P states that account should be taken of possible differences between the ground properties and geotechnical parameters obtained from test results and those governing the behaviour of the geotechnical structure. These differences can be due to a number of factors, such as stress level, time effects and construction activities, which are listed in *clause 2.4.3(4)*. The subclauses of *clause 3.3* list the various factors and features that should either be considered or taken into account when assessing the values of the geotechnical parameters obtained from particular field and laboratory tests. The factors to be considered when assessing the other geotechnical information, such as the classification and description of soil and rock, and the quality of rock and rock masses, are also provided.

Clause 2.4.3(3)P
Clause 2.4.3(4)
Clause 3.3
Clause 3.3.6(1)

Examples of the factors that need to be considered when assessing the shear strength of soil include the following:

- the stress level imposed on the soil
- anisotropy of strength
- strain rate effects
- sample disturbance
- the level of confidence in the theory used to obtain the derived value.

Generally, the features that need to be considered or taken into account when assessing the derived values of geotechnical parameter values are simply listed in *clause 3.3* of EN 1997-1, without explicit guidance being given there as to how these features are to be considered or taken into account.

Clause 3.3

Calibration and correction factors

According to *clause 2.4.3(6)P*, calibration factors must be applied where necessary to convert the parameter values obtained from test results into values representing the behaviour of the soil or rock in the ground, for the actual limit state and to take account of correlations used to obtain derived values from test results.

Clause 2.4.3(6)P

An example of a calibration factor is the correction factor which must be applied to the c_{fv} values measured in field vane tests in order to derive the appropriate undrained shear strength values of c_u corresponding to those obtained from comparable experience and from the back-analyses of slope failures. This factor depends on the liquid limit, plasticity index and vertical effective stress, and examples of correction factors are given in EN 1997-2 for normally consolidated and over-consolidated clays.

Clause 3.3.10.3(3)P

Another example of a correction factor is the factor of 1.1 applied to the φ' values obtained from triaxial tests to convert them from axi-symmetric to plane strain conditions.

Other relevant data

It is noted in *clause 2.4.3(1)* that geotechnical parameter values must be obtained from test results, either directly or through correlation, theory and empiricism, and from other relevant data. The phrase 'other relevant data' is very important when establishing the values of geotechnical parameters, and relates to the items listed in *clause 2.4.3(5)*, which are the other information and factors that should be considered, and include:

Clause 2.4.3(1)
Clause 2.4.3(5)

- published material for the test in appropriate ground conditions in order to interpret the test results
- comparison of each derived parameter value with published data, local experience and large-scale field trials, if available

- correlations between the results of more than one type of field test, whenever available, the results of any large-scale field trials and measurements from neighbouring constructions.

3.3.4. Characteristic values

Having obtained a set of geotechnical parameter values from test results in Step 1, by applying the appropriate calibration and correction factors and taking account of the other relevant data, the characteristic value for a particular design situation is then assessed in Step 2. The characteristic value of a geotechnical parameter is defined in *clause 2.4.5.2(2)P* as a cautious estimate of the value affecting the occurrence of the limit state.

Clause 2.4.5.2(2)P

As indicated in Fig. 2.3, assessing the characteristic value of a geotechnical parameter involves taking account of the following factors:

Clause 2.4.5.2(4)P

- the variability of the ground
- the number of tests results
- the scatter of the test results
- the type of limit state
- the volume of the ground involved
- the nature of the structure.

The assessment of characteristic values is described in detail in Chapter 2.

3.4. Ground Investigation Report

All geotechnical designs, including small and relatively simple structures on straightforward ground conditions, should be based on the results of geotechnical investigations. *Clause 3.4.1(1)P* states that the information obtained from geotechnical investigations must be compiled in a Ground Investigation Report, which forms part of the Geotechnical Design Report. The person who prepares the Ground Investigation Report is often not the person who prepares the Geotechnical Design Report. It is assumed that there will be adequate continuity and communication between those involved in data collection, design and construction. It is important, therefore, that the person who is responsible for the geotechnical design, if not also involved in the ground investigation, has good communication with those who carried out the investigation and obtained the geotechnical data for the design.

Clause 3.4.1(1)P

Clause 1.3(2)

The information in a Ground Investigation Report normally consists of the following two parts:

Clause 3.4.1(3)

(1) a presentation of all the available geotechnical data and other information
(2) a geotechnical evaluation of the information, including the assumptions made in interpreting the test results and the derived parameter values.

The first part of the Ground Investigation Report is the presentation of the geotechnical information from the ground investigation and corresponds to what is commonly referred to as a 'factual report'. This part must include:

Clause 3.4.2(1)P

- a factual account of all the field and laboratory investigations
- information about the methods used to carry out the field investigations and laboratory testing.

A list of additional information that should also be included in this part of the Ground Investigation Report, if relevant, is provided in *clause 3.4.2(2)*. This list includes items such as:

Clause 3.4.2(2)

- the names of all consultants and contractors
- the history of the site
- the geology of the site, including faulting
- local experience in the area.

The second part of the Ground Investigation Report is the evaluation of the geotechnical information, and corresponds to what is commonly referred to as an 'interpretative report'. According to *clause 3.4.3(1)P*, this part must include the following items: *Clause 3.4.3(1)P*

- a review of the field and laboratory work, particularly any factors that need to be considered when interpreting the results, for example limitations in the data, sampling, sample transportation and storage procedures and any particularly adverse test results
- a review of the derived values of geotechnical parameters
- proposals for necessary further field and laboratory work and the purposes of such work.

A list is also provided in *clause 3.4.3(2)* of some additional items that should also be included, if relevant, in this part of the Ground Investigation Report. This list includes items such as: *Clause 3.4.3(2)*

- depth of the groundwater table and its seasonal fluctuations
- subsurface profile(s) showing the differentiation of the various formations
- detailed descriptions of all formations including their physical properties and their deformation and strength characteristics.

In the case of simple design situations, for example Geotechnical Category 1 designs involving small structures on ground that is known from comparable experience to be straightforward, the two parts of the Ground Investigation Report together with the Geotechnical Design Report may be presented on one page, as shown in Fig. 2.9.

CHAPTER 4

Supervision of construction, monitoring and maintenance

This chapter is concerned with the supervision of construction, monitoring and maintenance of those geotechnical structures covered by Eurocode 7. The structure of the chapter generally follows that of *Section 4* in EN 1997-1.

4.1. Introduction

It is a Principle of EN 1997-1 that all geotechnical construction processes, including the workmanship applied, shall be supervised, that the performance of the structure shall be monitored, both during and after construction, and that the finished structure shall be adequately maintained. *Clause 4.1(1)P*

Section 4 of EN 1997-1 has three main themes:

(1) Ensuring safety and quality through supervision, monitoring and maintenance. An important requirement is that the nature and quality of the supervision and monitoring prescribed for the project shall be commensurate with the degree of precision assumed in the design and in the selection of the engineering parameters and partial factors in the design calculations. In other words, it may be necessary to prescribe an enhanced regime of construction supervision and monitoring, where greater uncertainty surrounds the reliability of the design parameters and the degree of accuracy of design calculations. *Clause 4.1(8)P*
(2) Specifying what shall be done, and communicating this formally in contract documents and records such as the Geotechnical Design Report (GDR). *Clause 2.8(1)P*
(3) Supervising, monitoring and maintaining in an orderly, planned manner, with the keeping of records.

The section is primarily concerned with the designer's responsibility for **specifying** the requirements for construction supervision, monitoring and maintenance. The section is concerned principally with the decisions of the designer and with information that others should make available to him or her. Clearly, it cannot be the designer's responsibility to ensure that post-construction monitoring and maintenance are carried out on the structure; however, it **is** the designer's responsibility to prepare and communicate specifications for

Box 4.1. Summary of items to be checked during construction

- Location and general layout of structure
- Ground conditions, by **direct** checking:
  - during excavation, i.e.
    - slopes and bottom of the excavation pit
    - ground material when boring for piles and anchorages
  - By **indirect** checks, i.e. during
    - piling driving
    - driving of sheet piles
- Groundwater conditions:
    - flow and pore-water pressure regime
    - effectiveness of groundwater control measures
- Structural settlements and movements, and stability of excavations
- Temporary support systems
- Effects of construction on nearby buildings and utilities
- Soil pressure on retaining structures
- Safety of workers

any such monitoring and maintenance, so that assumptions made in the design can be confirmed during and subsequent to construction.

Section 4 gives no details of the requirements for **workmanship**, for which reference should be made to the various 'execution' standards for special geotechnical structures; see the list in Chapter 1 of this guide.

In many instances, it is left to the designer to specify what is 'appropriate', and, in most respects, the whole section is simply a checklist reminding the designer of many of the items which might be required or desirable in various circumstances. The amount of supervision, monitoring and maintenance will depend on the nature of the project and the ground conditions.

As in other parts of Eurocode 7, this section does not specify contractual arrangements. It does, however, specify what tasks must be undertaken and that an appropriate flow of information must be maintained.

The section does not deal specifically with site safety matters, for which reference should be made to national legislation.

Who is to do the supervision, monitoring and maintenance?

This is not stated, but it is assumed that adequate continuity and communication exist between the designer and the constructor, and that adequate maintenance of the structure will occur during its life. The GDR is intended to establish the requisite communication by including a plan for the supervision and monitoring of listed items during construction, and items to be checked for maintenance in service. Extracts from the GDR concerning any monitoring and maintenance requirements post-construction shall be provided to the owner/client.

Clause 2.8(6)P

Annex J of EN 1997-1 provides a list of the more important items to be considered for supervision during construction; a summary is given in Box 4.1.

The last item, safety of workers, is not specifically covered by the Eurocodes, being a matter for national health and safety regulation. However, there is a requirement for the person checking geotechnical construction activities to ensure the safety of workers against, for example, the collapse of an excavation in which they are working.

4.2. Supervision

Clause 4.2

Supervision in EN 1997-1 means checking both the design and the construction. A plan is required, to be included in the GDR, that will depend on the scale and complexity of the

project, as represented by Geotechnical Categories (GCs). In the case of GC1, supervision may be reduced to a visual inspection of the ground, superficial quality controls, and a qualitative assessment of the performance of the structure during and immediately after construction may be all that is required. Further monitoring and maintenance will probably not be required at all. For GC2, measurements of the properties of the ground or the movement of the structure may be necessary. Tests to check the movement under load and the quality of piles, or tests of the density of fill behind a retaining wall, are examples of the monitoring that might be required for GC2 projects.

Clause 4.2.1(*1*) states that '*The construction shall be inspected on a continuous basis*'. '*Continuous'* means that inspection should not be so infrequent that important features of the ground or of the installation of foundations, for example, may be missed.

That inspection records should systematically be kept and made available to the designer is an important requirement of EN 1997-1. The following features shall be recorded, as appropriate: *Clause 4.2.2(5)P*

- significant ground and groundwater features
- the sequence of works
- the quality of materials
- deviation from design
- as-built drawings
- results of measurements and their interpretation
- observations of the environmental conditions
- unforeseen events.

4.3. Checking ground conditions

Clause 4.3

'Control investigations' concern checks of the ground and groundwater conditions. They involve checking the design assumptions made and, if necessary, carrying out further investigation of:

- the ground (soil or rock type and properties)
- the groundwater, including the level, pore-water pressures and chemistry, and the effects on the groundwater regime of such operations as dewatering, grouting and tunnelling. *Clause 4.3.2*

In the case of simple, GC1, designs, checking of ground and groundwater may be limited to visual inspection and reliance on documented or other indirect evidence of site conditions. For GC2 designs, additional sampling and laboratory testing or *in situ* testing and measuring may be required as part of the control investigation. Indirect evidence of ground properties from pile-driving records, for example, should be recorded and used in interpretation of ground conditions. *Clause 4.3.1(5)*

4.4. Checking construction

Clause 4.4(1)P

Construction operations shall be checked to ensure that they comply with the methods assumed in the design and documented in the GDR. This Eurocode 7 requirement may result in designers having to consider more carefully the likely construction methods, and to state their design assumptions in the GDR (an example is the checking of fill placement and compaction). However, this is not normally necessary for GC1 designs, where construction sequences are frequently simple and straightforward and decided by the contractor. *Clause 4.4(4)*

Deviations from design assumptions about ground and groundwater conditions and construction methods shall be reported without delay to the person responsible for the design. *Clause 4.4(1)P*

4.5. Monitoring

Clause 4.5(4) The measurements that may be required from a monitoring scheme include the following features and their variation with time:

- deformations of the ground affected by the structure
- values of actions
- values of contact pressures between ground and structure
- pore-water pressures
- forces and displacements in structural elements.

Clause 4.5(8) *Clause 4.5(10)* *Clause 4.5(1)P* *Clause 4.5(4)*

For GC1 designs, a simple visual inspection may be sufficient, while for GC2 structures monitoring may include measurements at selected points on the structure. For GC3 projects, EN 1997-1 recommends that analysis of the construction operations be added to measurements at selected points. The requirements for monitoring, with the recommendation of formal keeping of records, need not be onerous for 'routine' geotechnical activities (as described for GC1 and GC2). In the case of a simple foundation, they need only be minimal, as shown in the sample Geotechnical Design Report for a strip footing in Fig. 2.9.

CHAPTER 5

Fill, dewatering, ground improvement and reinforcement

This chapter is concerned with design requirements related to fill, dewatering, ground improvement and reinforcement. The chapter describes what could be termed 'engineered ground' or 'made ground'. The material is covered in *Section 5* of EN 1997-1. The structure of the chapter follows that of *Section 5*:

5.1. General

The requirements for the design of fill, dewatering, ground improvement and (ground) reinforcement according to EN 1997-1 are combined in one section, *Section 5*. This is due to the fact that each of these processes is concerned with improving the properties of the ground, while an earlier section of EN 1997-1, *Section 3*, is concerned with determining the properties of existing ground. *Section 5* provides the general requirements for the design of fill, dewatering, ground improvement and ground reinforcement giving few specific requirements except for some aspects of fill. The section is effectively a checklist of items which must be considered in the design. *Clause 5.1(1)P*

The design procedures for geotechnical structures involving the use of fill, ground improvement or reinforcement processes are covered in the sections of EN 1997-1 dealing with the design of spread foundations, piles, anchorages, retaining structures, hydraulic failure, overall stability and embankments. It should be noted that, in the context of EN 1997-1, fill placed during execution is by definition part of the structure in that EN 1997-1 defines a structure as an organized combination of connected parts, including fill placed during execution of the construction works, designed to carry loads and provide adequate rigidity. *Clause 1.5.2.4*

5.2. Fundamental requirements

Fill, dewatered, improved or reinforced ground all have to satisfy the same fundamental requirements as existing ground, which are that they must be capable of sustaining the actions arising from their function and from their environment. *Clause 5.2(1)P*

5.3. Fill construction

Clause 5.3

The design and construction of fill beneath foundations and floor slabs, as well as backfill to excavations and retaining structures, is covered by the provisions in *clause 5.3*. The design and construction of fill for general landfill, including hydraulic fill, landscape mounds, spoil heaps and fill for embankments for dams (dykes) and transportation networks, are also covered. This clause covers the selection, placement, compaction and checking of fills. It provides a checklist of items, which should all be covered in specifications for earthworks.

In the same way as for natural ground, design calculations involving fill materials require assessment of the characteristic values of the material properties. At the time of design, the fill to be used may not have been identified, though its properties will have been specified. The assessment of the characteristic values of fill properties should follow the principles of *clause 2.4.5.2*, requiring an assessment of a cautious estimate of the value affecting the occurrence of the limit state.

Clause 2.4.5.2

5.4. Dewatering

Dewatering covers the abstraction of water both to improve the properties of ground and to facilitate construction. In some situations, groundwater recharge may also be required as part of a dewatering scheme to prevent drawdown causing unacceptable settlements of neighbouring structures. The conditions to be satisfied and the aspects to be checked when designing a dewatering scheme to EN 1997-1 are set out in *Clause 5.4*, which provides a checklist of conditions to be considered by designers.

Clause 5.4

Clause 5.4(4)

In the checklist of conditions to be considered, there is one condition that is particularly important in the design of a dewatering scheme: it should be checked that the settlements induced by the groundwater lowering do not lead to settlements of neighbouring structures, which may cause damage or impair their serviceability. Especially dangerous are situations where a permeable stratum overlying a compressible stratum is dewatered. Moreover, it should be checked that the groundwater lowering does not have adverse effects on other water extractions in the neighbourhood.

It should be noted that the extent to which the groundwater can be lowered in a specific situation is highly dependent on the permeability of the ground and its variation over the strata involved.

Clause 2.7

The design of dewatering schemes may very often benefit from the use of the observational method.

The importance of considering the effects of groundwater is mentioned in many sections and clauses of EN 1997-1; for example, *clause 2.4.2(9)P* emphasizes the importance of identifying for special consideration actions in which groundwater and free water forces predominate, while *clause 10.5(1)P* highlights the need for measures to control or block the groundwater flow to prevent piping endangering the stability or serviceability of a structure.

Clause 2.4.2(9)P

Clause 10.5(1)P

5.5. Ground improvement and reinforcement

Clause 5.5

The design of ground improvement and reinforcement schemes is only covered in general terms in EN 1997-1. In many cases such schemes would be classified as Geotechnical Category 3 structures. As such, they would not be fully covered by the code requirements in EN 1997-1, and their design should be carried out by a geotechnical specialist. It appears that the basis for this is that ground improvement and reinforcement are not considered to be **conventional types of structures and foundations**, which could be classified under Geotechnical Category 2.

Some of the aspects which must be considered when designing a ground improvement or ground reinforcement scheme are listed. This list includes, for example, the thickness of the *in situ* strata or fill material, the nature, size and position of the structure to be supported by the ground, the importance of preventing damage to adjacent structures, etc. EN 1997-1 requires that the effectiveness of ground improvement be checked against the acceptance criteria by determining the changes in the appropriate ground properties or ground conditions resulting from use of the improvement method. In order to do this, EN 1997-1 requires that a geotechnical investigation to determine the initial conditions be carried out before any ground improvement is chosen or used.

Clause 5.5(2)P

Clause 5.5(3)

Clause 5.5(1)P

CHAPTER 6

Spread foundations

This chapter is concerned with checking the design of spread foundations. The material is covered in *Section 6* of EN 1997-1 and in the informative *Annexes D* ('*Sample analytical method for bearing resistance calculation*'), *E* ('*Sample semi-empirical method for bearing resistance estimation*'), *F* ('*Sample methods for settlement evaluation*'), *G* ('*A sample method for deriving presumed bearing resistance for spread foundations on rock*') and *H* ('*Limiting values of structural deformation and foundation movement*').

Several sections and annexes of EN 1997-2 give additional information regarding semi-empirical calculation models for bearing resistance and settlement evaluation using *in situ* test results.

The structure of the chapter differs slightly from that of *Section 6* of EN 1997-1, and corresponds as follows:

6.1.	Design methods	*Clause 6.4*
6.2.	Overall stability	*Clause 6.5.1*
6.3.	Direct method: ULS design	*Clause 6.5.2*
6.4.	Direct method: SLS design by settlement calculations	*Clause 6.6*
6.5.	Indirect method: simplified SLS method	*Clauses 6.4* and *2.4*
6.6.	Prescriptive method	*Clause 6.5.4.2*
6.7.	Structural design	*Clause 6.8*

In common with other sections of EN 1997-1, *Section 6* gives only the basic requirements for the design of spread foundations. To assist the designer, this chapter describes typical calculation methods for ultimate limit state (ULS) and serviceability limit state (SLS) design checks, and includes the following examples:

- Example 6.1: a vertically loaded, square foundation pad on soft clay in drained and undrained conditions. The 'direct' method is illustrated using the analytical calculation model for bearing resistance of *Appendix D* of EN 1997-1.
- Example 6.2: the design of a square pad foundation, on sand and gravel, for a tower subjected to a small, vertical, permanent action and a large, variable, horizontal action. The 'direct' method, applying the analytical calculation model in *Appendix D* of EN 1997-1, is used for a ULS design.
- Example 6.3: the design of a spread foundation using pressuremeter test results in which both the 'direct' and 'indirect' methods are demonstrated for a semi-empirical calculation model.

Many of the provisions of *Section 6* also apply to gravity retaining structures; Example 9.1 in this guide, consisting of the ULS check against bearing capacity and sliding of the design of the foundation of a gravity (stem) wall, illustrates the application. *Clause 9.7.3(1)P*

Section 6 may also be applicable to pile groups in compression (e.g. checking against failure of a pile group by equivalent raft methods).

6.1. Design methods

Clause 6.2(1)P Some limit states are listed for consideration. The first four are clearly ULSs where an 'infinite' movement of the foundation occurs; the fifth on the list implies such large but contained (differential) movements of the foundation that the supported structure reaches a ULS, i.e. no longer fulfils the basic ULS requirements of its members or member connections; the last three items concern SLSs.

Clause 6.4(1)P *Clause 2.5* The attention of the designer is also drawn to several aspects which may play a role in the choice of the depth of a spread foundation. Some of the listed items may be treated by prescriptive measures. The checklist requires that future excavations should be considered. This does not demand that the spread foundation be designed to withstand all conceivable excavations; it merely requires that the designer considers possible future situations and adopts a reasonable course of action. The same holds for other items in the checklist.

Clause 6.4(5)P One of three design methods has to be used to check the foundation design (see also Table 6.1 for a general overview), as follows:

(1) A **direct** method which involves two separate checks:
- firstly using a calculation model as close as possible to the ULS failure mechanism
- secondly using a settlement calculation to satisfy the SLS.

Clause 6.5.2.2 *Clause 6.5.3* *Clause 6.5.2.3* No restriction is placed on the calculation models that can be used for each of the two steps. The ULS check can be performed using analytical calculation models for bearing or sliding resistance, or using semi-empirical calculation models where the bearing resistance is assessed directly as a derived value from *in situ* test results. The SLS check must be performed by using settlement calculations (either an analytical calculation – see *Annex F*, for example – or semi-empirical models for settlement calculation – see EN 1997-2, Annex B2, C2 or D4, for example).

(2) An **indirect** method which is based on comparable experience (an essential prerequisite), and which uses the results of field or laboratory measurements or other observations and SLS loads. The comparable experience is related to SLSs, so that the use of this method is intended automatically to satisfies the SLS requirement. The indirect method also implicitly covers the ULS, at least for common structures with no exceptional loading, provided the comparable experience is relevant. The indirect method is thus a one-step method for checking both the SLS and the ULS. Calculations may be performed using analytical or semi-empirical models. The choice of a Design Approach (see Chapter 2) does not apply as the check is based on SLS conditions.

(3) A **prescriptive** method, which is usually based on comparable experience of the observation of serviceability states.

Table 6.1 gives an overview of these three design methods as well as examples of calculation models for spread foundations, with reference to relevant clauses and to sample methods in informative annexes of EN 1997-1 and EN 1997-2.

It should be noted that simple structures, with no exceptional loading conditions, may be designed using the indirect method or the prescriptive method, but that large or complex structures, on difficult or compressible soil, should be designed using the two-step directmethod. Furthermore, for structures subjected to significant horizontal loads, careful attention should be paid to the eccentricity and inclination of the design loads.

6.2. Overall stability

Clause 6.5.1(1)P EN 1997-1 requires the design to be checked for the overall stability of the ground mass according to the principles described in *Section 11*. The potentially unstable ground may

Table 6.1. Overview of the design methods permitted by EN 1997-1 and corresponding calculation models

Method and limit states	Calculation model	EN 1997-1 clause	Sample method
Direct method			
(a) ULS		*6.5.2*, *6.5.3*	
	Analytical calculation model		
	– Bearing resistance	*6.5.2.2*	EN 1997-1, *Annex D*
	– Sliding resistance	*6.5.3*	
	Semi-empirical calculation model		EN 1997-1, *Annex E*
	– Pressuremeter	*6.5.2.3*	EN 1997-2, Annex C1
(b) SLS		*6.6*	
	Analytical settlement calculation		EN 1997-1, *Annex F*
	– Settlement calculation	*6.6.2*	
	Semi-empirical settlement calculation		EN 1997-2, Annexes B2, C2, D4
	– Cone penetrometer, pressuremeter, standard penetration test		
Indirect method		*2.4.1(4)*, *2.4.8(4)*	
ULS and SLS combined	Analytical calculation model		EN 1997-1, *Annex D*
	– Applying high 'global' factors to 'characteristic' bearing resistance		
	Semi-empirical calculation model		EN 1997-2, Annex C1
	– Applying high 'global' factors to 'characteristic' bearing resistance		
Prescriptive method		*6.5.2.4*, *6.7*	
ULS and SLS combined	Charts or tables for values of presumed bearing resistance		EN 1997-1, *Annex G*

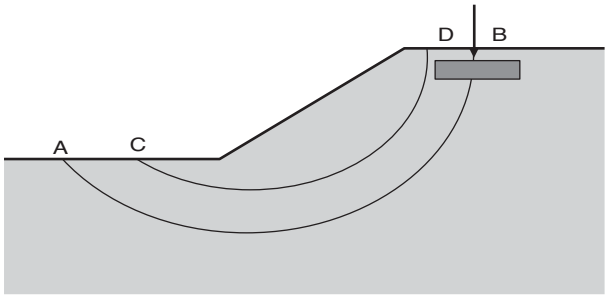

Fig. 6.1. Overall stability has to be checked for failure surfaces A–B and C–D. The failure surface C–D passes outside of the foundation but, if slope movement occurs, the vertical bearing resistance of the foundation is substantially reduced

contain the foundation (Fig. 6.1, failure surface A–B) or the failure surface may pass close to it (Fig. 6.1, failure surface C–D). Since failure along surface C–D may substantially affect the bearing resistance of the foundation itself, the slope failure along C–D should also be sufficiently improbable.

The qualification '*sufficiently improbable*' is vague, and should be taken to mean that loss of overall stability should be as improbable as the loss of vertical bearing resistance of the *Clause 6.5.1(2)P*

foundation. When Design Approaches 1 (DA-1) and 3 (DA-3) are used, this will usually be ensured by using the same partial factors for the slope stability calculations and for the calculation of the bearing resistance. When Design Approach 2 (DA-2) is used, the partial resistance factors for overall stability and for bearing resistance are different (see *Tables A.14* and *A.5*, respectively).

6.3. Direct method: ULS design

6.3.1. Bearing resistance

Clause 6.5.2.1(1)P The fundamental ULS requirement is represented by the inequality

$$V_d \leq R_d \tag{6.1}$$

where V_d is the ULS design load normal to the foundation and R_d is the design bearing resistance of the foundation against loads normal to it (Fig. 6.2). R_d may be calculated using analytical or semi-empirical models. V_d includes the weight of the foundation and of any backfill material (to be considered as a 'structural action') placed on top of it. Earth pressures on structural elements above the foundation level are geotechnical actions and are also included in V_d where relevant.

The basic inequality $V_d \leq R_d$ has to be checked for the recommended partial factors for persistent and transient situations in *Annex A* (*Table A.1* for partial factors on actions or the effects of actions; *Tables A.2* and *A.5* for partial factors on soil parameters and resistances). For accidental situations, the partial factors are usually put equal to 1.0. It should be noted that the recommended values for the partial factors given in *Annex A* are established for analytical methods in all three Design Approaches and for the semi-empirical method in DA-2; thus semi-empirical methods in DA-1 and DA-3 may need the application of model factors according to *clause 2.4.7.1*(*6*).

EN 1997-1 recommends that water pressures not caused by the foundation loads are included explicitly in calculations. For **drained** conditions, it suggests that water pressures are included as actions. A typical situation is illustrated in Fig. 6.3. It is consistent with the

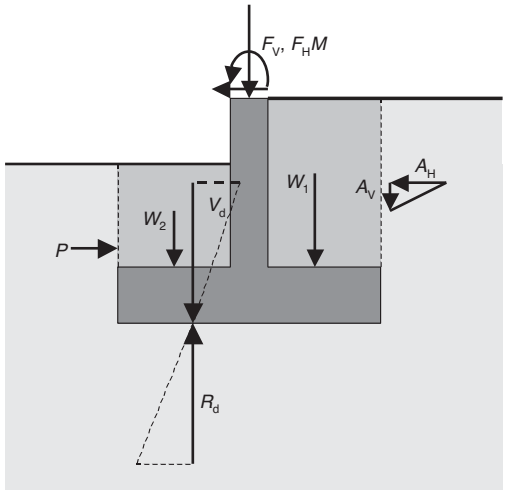

Fig. 6.2. Example of actions on the footing. V_d is the component, normal to the foundation, of the design values of the following actions (the subscript d is omitted for clarity):

H, *M* and *V*, which are structural actions
A and *P*, which are earth pressures
W_1 and W_2, which are weights of backfill
weight of the footing

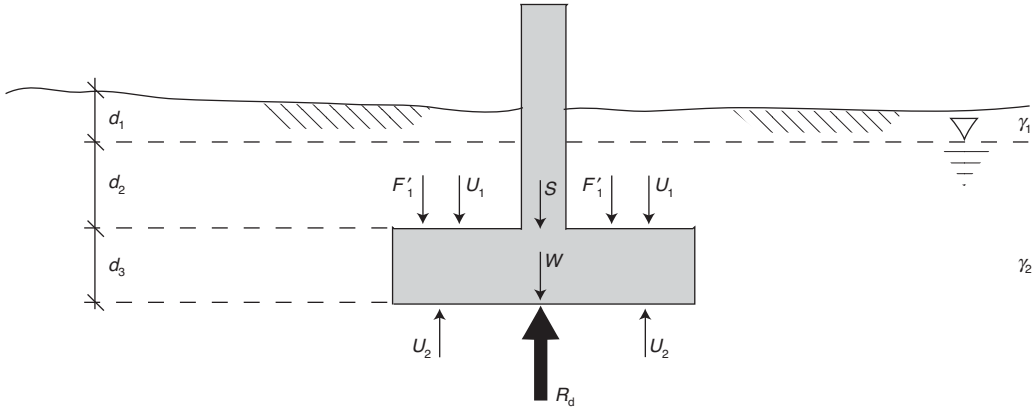

Fig. 6.3. Actions on a footing with hydrostatic water pressure. (After Simpson and Driscoll, 1998.)

A_b = area of footing base
A_c = area of column cross-section
γ_1 = total weight density of soil above the water table
γ_2 = total weight density of soil below the water table
S = action from the superstructure
W = weight of footing
U_1, U_2 = forces due to water pressure
F_1 = effect of the action of backfill on the foundation
$= (\gamma_1 d_1 + \gamma_2 d_2)(A_b - A_c)$
$= F_1' + U_1$
$= (\gamma_1 d_1 + (\gamma_2 - \gamma_w)d_2 + \gamma_w d_2)(A_b - A_c)$
where
F_1' = effective effect of the action of the backfill on the foundation
$U_2 = \gamma_w(d_2 + d_3)A_b$

V_d must be matched by design resistance R_d, which in this case is an effective force

definition of actions to treat all water pressures in drained conditions as actions, since they are known at the start of the calculation. This implies that the resistance is calculated in terms of effective stress. The question may arise: how to apply the partial factors to the weight of a submerged or partially submerged structure? The force due to water pressure acting on the underside of the foundation acts so as to reduce the value of V_d, and may then be considered as 'favourable', while the (total) weight of the foundation is unfavourable. Physically, however, it is the submerged weight (total weight minus upward force of water) which has to be sustained by the soil, for which the resistance is then expressed in terms of effective forces; the same single partial factor may be applied to the sum of these actions. This is illustrated in Fig. 6.3. The design values of the actions due to the weight of the submerged footing and to the backfill become the design values of their effective weights. Action factors of 1.0 (DA-1 Combination 2) and 1.35 (DA-1 Combination 1, and DA-2 and DA-3) are applied to the effective weight of the submerged footing and backfill if they are unfavourable. This is illustrated in Example 6.1. Action factors of 1.0 apply for all Design Approaches if the effective weight of the foundation is favourable.

Clause 2.4.2(9)P

The calculations for **undrained** conditions are shown in Fig. 6.4 and in Example 6.1.

A method similar to that outlined in Fig. 6.4 applies in the semi-empirical calculation model given in *Annex E*, which is expressed in terms of a total stress (independent of whether the soil is in a drained or an undrained condition). Example 6.3 illustrates this.

For the design of structural members, water pressures may be unfavourable (e.g. for rafts or closed caissons forming boxes), and the action factor for unfavourable structural actions should be applied to the water pressures (see Section 6.7).

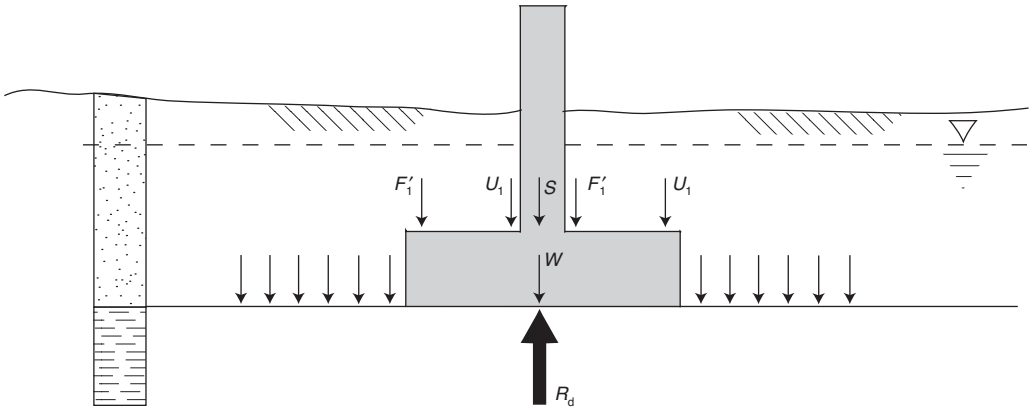

Fig. 6.4. Footing with hydrostatic water pressure in granular soil over undrained clay. (After Simpson and Driscoll, 1998.)

Arrows show hydrostatic water pressures (vertical components only). Those acting on the footing are included in V_d whilst those alongside the footing augment R_d. In this (undrained) case, R_d is a total force, acting on the base, which includes both the hydrostatic pore pressures and excess pore pressures due to undrained shearing.

The action on the ground, V_d, which is to be supported by the undrained resistance R_d, is given by

$$V_d = S + W + F_l = S + W + (F_l' + U_l)$$

F_l' is defined in Fig. 6.3.

A possible alternative approach is to include the hydrostatic water pressures in the clay as part of V_d, as for the drained case; these act upwards on the base of the footing, reducing the value of V_d as in Fig. 6.3. The excess pore pressures generated at the base of the footing due to shearing remain part of R_d, however. This is consistent with the definition of actions in *clause 2.4.2(2)P*, since the hydrostatic component is known, but the excess pore pressure is unknown at the start (and end) of the calculation

Analytical calculation

Clause 6.5.2.2(1) The sample calculation model given in *Annex D* is widely recognized. *Annex D* gives an idea of the degree of accuracy and conservatism that is appropriate. The recommended values for the partial factors of *Annex A* (*Tables A.1*, *A.2* and *A.5*) have been calibrated to the method in *Annex D*.

Annex D is marked as 'informative'. The designer may, therefore, use other methods that may be specified in the National Annex.

Clauses 6.5.2.2(4) to 6.5.2.2(6) The calculation model of *Annex D* applies to a single soil layer. Caution is advised for layered soils or ground containing discontinuities. *Paragraph* (*5*) may be over-conservative or inappropriate in several situations. More refined calculation models may be employed, e.g. for punching failure, for squeezing, or for undrained shear resistance increasing with depth. The partial factors to be used depend on which Design Approach is adopted.

Basic input parameters for the analytical calculations are characteristic values of soil shear strength (c_k', φ_k' in drained conditions; $c_{u,k}$ in undrained conditions) and weight density (γ_k and γ_k'). Their characteristic value should be selected to account for the variability of the ground relative to the size of the foundation and the stiffness of the structure:

- For a large, spread foundation, the characteristic value of the shear resistance parameters will usually be a cautious estimate of the mean value under the foundation. When a building is supported on several footings, the characteristic value should account for the spatial variability of the shear strength parameters over the footprint of the building and for the stiffness of the supported structure.

- Local weak spots, leading to significantly lower bearing resistance, should be identified when selecting the characteristic values. If no such weak spots exist, the characteristic shear strength may be a cautious estimate of the mean values over the footprint of the structure. If weak spots exist and the supported structure is not stiff enough to transfer loads from footings at weak spots to footings at stronger spots, the characteristic value of the shear strength parameters may be a cautious estimate of the mean or lower values under each footing separately.

When selecting the characteristic value of ground shear strength parameters for the design of a small footing, attention should be paid to failure surfaces which may develop preferentially along points of weakness in the ground. Should this possibility be likely, then the selection of the characteristic value should be governed by the lower values of the ground strength parameters.

The characteristic value of the unit weight of the soil should be a cautious estimate of its mean value.

The effective overburden pressure at the level of the foundation, q', is a cautious estimate of its mean value in the vicinity of the footing. It should account for unfavourable water levels and the adverse effect on bearing resistance of a reduction in overburden through any removal of soil.

Some features to note when applying an analytical calculation model using DA-1 *Clause 2.4.7.3.4.2*

For persistent and transient situations, the design has to be checked for both Combinations 1 and 2:

Combination 1: *A1* '+' *M1* '+' *R1*

Combination 2: *A2* '+' *M2* '+' *R1*

The partial factors are applied at the source, i.e. on the actions (for recommended values, see *Table A.1*) and on the material shear strength parameters c' and $\tan \varphi'$ or c_u (for recommended values, see *Table A.2*). For spread foundations, the factors on the resistance are equal to 1.0 (see *Table A.5*).

Combination 2 usually determines the dimensions of the foundation, except in situations where a horizontal variable load, the value of which is large compared with the permanent vertical load, leads to a large overturning moment on the foundation. Such a load combination may lead to a very eccentric design value of the resulting action. It is advisable, in a first step, to calculate the size of the foundation for the partial factors of Combination 2, and then to check, in a second step, that the resulting size fulfils the ULS requirements for the partial factors of Combination 1.

Step 1 – sizing of foundation using Combination 2: A2 '+' M2 '+' R1. The design values of the structural actions on the foundation are obtained by applying the factors in set *A2* of *Table A.3* (recommended values are $\gamma_F = 1.0$ on unfavourable, permanent loads and $\gamma_Q = 1.3$ on unfavourable, variable loads; but these may be changed in the National Annex). Design values of geotechnical actions (e.g. active pressure) are obtained by applying the factors of set *M2* of *Table A.4* to the shear strength parameters, and the action factors of set *A2* of *Table A.3* to unfavourable, permanent geotechnical actions (recommended value is $\gamma_F = 1.0$) and to the unfavourable, variable geotechnical actions (recommended value: $\gamma_Q = 1.3$).

The design values of the soil shear strength parameters are obtained by applying factors larger than 1.0 to the characteristic values, as in set *M2* of *Table A.4* (recommended values are $\gamma_{\varphi'} = 1.25$, $\gamma_{c'} = 1.25$ and $\gamma_{cu} = 1.4$; but these may be changed in the National Annex). The partial factor on the resistance γ_{Rv} is 1.0 according to set *R1* of *Table A.5*.

A partial material factor of 1.0 is applied to the characteristic (effective) weight density of the ground when calculating the overburden pressure as part of the bearing resistance.

The design values of the actions and of the shear strength parameters permit the calculation of:

- The design values of the components of the resulting actions normal (V_d) and parallel (H_d) to the foundation.
- The eccentricities $e_{B,d}$ and $e_{L,d}$ of the resulting actions and hence the effective dimensions B' and L' of the foundation.
- The bearing resistance factors $N_q(\varphi_d)$, $N_\gamma(\varphi_d)$ and $N_c(\varphi_d)$.
- The inclination factors i_q, i_γ and i_c as functions of the design values of the shear strength parameters and of H_d and of V_d.
- The shape factors s_q, s_γ and s_c and the base inclination factors b_q, b_γ and b_c.
- The design value of the bearing resistance, from R_d/A'.

Usually, several iterations will be needed to obtain the optimal foundation size to fulfil the ULS requirement.

Step 2 – checking the size of the foundation found in step 1 for the sets of partial factors of Combination 1: A1 '+' M1 '+' R1. The design values of the actions on the foundation are obtained by applying the factors according to *Table A.3*, set *A1* (recommended values are: $\gamma_F = 1.35$ on unfavourable, permanent, loads and $\gamma_Q = 1.5$ on unfavourable, variable loads; but they may be changed in the National Annex). Design values of geotechnical actions (e.g. active pressure) are obtained by applying these action factors to the characteristic values of the geotechnical actions. The design values of the soil shear strength parameters are equal to their characteristic values (with partial factors equal to 1.0, *Table A.4*, set *M1*). The partial factor on the resistance γ_{Rv} is 1.0 according to *Table A.5*.

It should be noted that a partial action factor equal to 1.0 is applied to the permanent water pressures, and a partial material factor equal to 1.0 is applied to the characteristic (effective) weight density of the ground, when calculating the (effective) overburden pressure.

Since the size of the foundation is usually determined by Combination 2, the calculation for Combination 1 is reduced to a simple check that the size of the footing fulfils the requirement of Combination 1.

Notes.

(1) For vertical or nearly vertical loads, it is often obvious that Combination 1 is not relevant for determining the foundation dimensions. Calculations for step 2 are not then necessary.
(2) Permanent actions may be favourable when, for example, they are acting in combination with large variable actions. In such cases, it is necessary to perform two calculations for Combination 1: one in which the permanent, vertical action is considered to be favourable, and hence acquires an action factor of 1.0, and another one in which the permanent vertical action is considered to be unfavourable, and hence acquires an action factor of 1.35. The first case is denoted by '$V_{favourable}$' and the second by '$V_{unfavourable}$' in the examples.

In Combination 1, the design value of the resistance is equal to its characteristic value when the load is vertical and is somewhat lower when the load is inclined.

Clause 2.4.7.3.4.3 **Some features when applying an analytical calculation model using DA-2**

The design has to be checked for one set of partial factors using the combination

A1 '+' M1 '+' R2

There are two ways to introduce the partial factors in DA-2, either by applying them to the actions (at the source) or by applying them to the effect of the actions. Both are discussed below.

When applying the **partial factors to the actions, at the source**, the design values of the structural actions on the foundation are obtained by applying the action factors in *Table A.3*, set *A1* (recommended values are $\gamma_F = 1.35$ on unfavourable, permanent actions and $\gamma_Q = 1.5$ on unfavourable, variable actions). Design values of geotechnical actions (e.g. active pressure) are obtained by applying γ_F and γ_Q to the values of the geotechnical actions calculated by applying a γ_M of 1.0 to the shear strength parameters (see *Table A.4*, set *M1*).

A partial material factor equal to 1.0 is applied to the characteristic (effective) weight density of the ground when calculating the (effective) overburden pressure.

The design value of the bearing resistance is obtained by applying a partial resistance factor γ_R larger than 1.0 (see *Table A.5*, set *R2*, where $\gamma_{R,v} = 1.4$) to the bearing resistance calculated using design values of the soil shear strength parameters equal to their characteristic values (i.e. bearing resistance calculated with $\gamma_M = 1.0$, see *Table A.4*, set *M1*).

The design value of the actions and the design value of the shear strength parameters permit the calculation of:

- The design values of the components of the resulting action normal (V_d) and parallel (H_d) to the foundation.
- The eccentricity $e_{B,d}$ and $e_{L,d}$ of the resulting action, and hence the effective dimensions B' and L' of the foundation.
- The bearing resistance factors $N_q(\varphi_d) = N_q(\varphi_k)$, $N_\gamma(\varphi_d) = N_\gamma(\varphi_k)$ and $N_c(\varphi_d) = N_c(\varphi_k)$.
- The inclination factors i_q, i_γ and i_c as functions of the design values of the shear strength parameters equal to their characteristic values and of H_d and V_d.
- The shape factors s_q, s_γ and s_c and the base inclination factors b_q, b_γ and b_c.
- The value of the bearing resistance R/A' is calculated using the above-mentioned factors in a bearing resistance formula (e.g. see *Annex D*). The design value of the bearing resistance R_d/A' is calculated by applying a partial resistance factor $\gamma_{R,v}$ which is greater than 1.0. (See *Table A.4*, set *R2*: recommended value $\gamma_{Rv} = 1.4$.)

For the procedure in DA-2 where the **partial factors are applied to the effect of all actions** (procedure denoted as DA-2*), the characteristic bearing resistance R_k/A' is calculated using characteristic values of the actions and characteristic values of the shear strength parameters. The inclined actions and the eccentricities $e_{B,k}$ and $e_{L,k}$ (and thus the effective width and length B' and L') are also calculated using characteristic values of the actions and shear strength parameters. As a result, the eccentricity will be smaller than if design values of actions were used, with $\gamma_F \geq 1.0$ applied at the source. As a consequence of this, when using the procedure in DA-2 where the partial factors are applied to the effect of actions and the resistance factor is applied to the bearing resistance calculated with characteristic values of actions, special care must be taken regarding overturning of the foundation. When applying this method, the eccentricities $e_{B,k}$ and $e_{L,k}$ are often limited to $B/3$, although this is not a requirement of EN 1997-1. *Clause 2.4.7.3.3(1)*

For both of the above procedures, it must be remembered that permanent actions may be favourable when, for example, they are acting in combination with large variable actions. In such cases, it is necessary to perform two calculations: one in which the permanent vertical action is considered to be favourable, and hence acquires a partial factor γ_F of 1.0, and another one in which the permanent vertical action is considered to be unfavourable, and hence acquires $\gamma_F = 1.35$.

Some features when applying an analytical calculation model using DA-3 *Clause 2.4.7.3.4.4*

The design has to be checked using the following sets of partial factors in combination:

(*A1* or *A2*) '+' *M2* '+' *R3*

The design values of the actions on the foundation are obtained as follows:

- **Structural actions**: by applying the factors of set *A1* of *Table A.3* (recommended values are: $\gamma_F = 1.35$ on unfavourable, permanent actions and $\gamma_Q = 1.5$ on unfavourable, variable actions).

- **Geotechnical actions** (e.g. active pressure): by applying the partial material factors of set *M2* of *Table A.4* to the characteristic values of the shear strength parameters, and the partial factors of set *A2* of *Table A.3* to the actions (recommended values are $\gamma_F = 1.0$ on permanent geotechnical actions and $\gamma_Q = 1.3$ on unfavourable, variable geotechnical actions).

The design values of the soil shear strength parameters are obtained by applying factors larger than 1.0 to the characteristic values, as in set *M2* of *Table A.4* (recommended values are $\gamma_\varphi = 1.25$, $\gamma_{c'} = 1.25$ and $\gamma_{cu} = 1.4$; these values may be changed in the National Annex).

The partial factor on the resistance, $\gamma_{R,v}$, is 1.0, according to set *R3* of *Table A.5*.

The design values of the actions and of the shear strength parameters as determined above permit the calculation of:

- The design values of the components of the resulting action normal (V_d) and parallel (H_d) to the foundation.
- The eccentricity $e_{B,d}$ and $e_{L,d}$ of the resulting action, and hence the effective dimensions B' and L' of the foundation.
- The bearing resistance factors $N_q(\varphi_d)$, $N_\gamma(\varphi_d)$ and $N_c(\varphi_d)$.
- The inclination factors i_q, i_γ and i_c as functions of the design values of the shear strength parameters and of H_d and V_d.
- The shape factors s_q, s_γ and s_c and the base inclination factors b_q, b_γ and b_c.
- The design value of the bearing resistance from R_d/A'.

Usually, several iterations will be needed to obtain the optimal foundation size to fulfil the requirement.

It should be noted that permanent structural actions may be favourable when, for example, they are acting in combination with large variable actions. In such cases, it is necessary to perform two calculations: one in which the permanent vertical action is considered to be favourable, and hence acquires an action factor γ_F of 1.0, and another one in which the permanent vertical action is considered to be unfavourable, and hence acquires $\gamma_F = 1.35$.

Clause 6.5.2.3 *Semi-empirical calculation*

Semi-empirical models can be used to assess the bearing resistance of a spread foundation from ground parameters (usually from the results of *in situ* tests). A sample method using pressuremeter test results is given in *Annex E*. This annex gives no further details on how to assess p_{le}^* and no values for the bearing factor k; the reader is referred to EN 1997-2, Annex C1, or to the literature.

When using semi-empirical models for ULS design, the actions and the resistances must be factored using the partial factors for which recommended values are given in *Annex A*. The application of partial factors to resistance is most appropriate when using semi-empirical models for ULS design. DA-2 can thus be applied straightforwardly with semi-empirical models. In DA-1 and DA-3, values greater than 1.0 for the factor $\gamma_{R,v}$ of set *R1* (DA-1) and set *R3* (DA-3) (*Table A.5*) and values of γ_M equal to 1.0 could be applied for semi-empirical models; the factor $\gamma_{R,v}$ then acts merely as a model factor (see Example 6.3).

Clause 6.5.3

6.3.2. Sliding resistance

The fundamental ULS requirement is represented by the inequality (Fig. 6.5):

$$H_d \leq R_d + R_{p,d} \tag{6.2}$$

Clause 6.5.3(5)

A limit state for the foundation may be reached even if the ground has not reached the limits of its strength, that is, without the formation of a failure mechanism in the ground. It is thus necessary to consider the displacement appropriate to the limit state considered. For this reason, $R_{p,d}$ may not necessarily be the limiting passive resistance of the ground. It should be considered also that the maximum available sliding resistance, R_d, is likely to

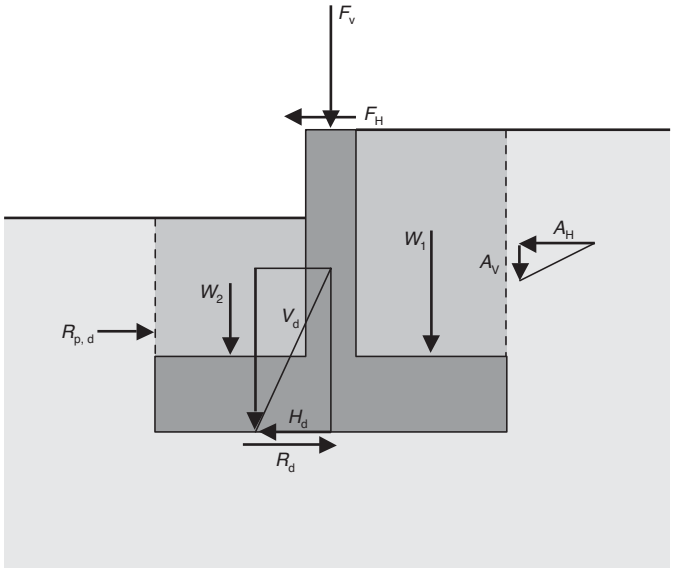

Fig. 6.5. *H* is the resultant of the horizontal components of earth pressure *A* and the structural action *F* (F_H). *V* is the resulting force normal to the foundation. The resistance against sliding is the sum of the frictional resistance under the footing, *R*, and the mobilized passive earth resistance, R_p

be mobilized with relatively little movement, though it could possibly reduce as large movements take place. Hence it may not be possible to mobilize the maximum values of R_d and $R_{p,d}$ simultaneously. The selection of the characteristic values of the shear strength parameters to assess R_d and $R_{p,d}$ should take account of any incompatibility in the movements in the limit state of sliding.

Consideration should be given to the effects of local excavation, erosion, shrinkage of clay, etc., acting to reduce or eliminate the passive resistance on relatively shallow foundations of retaining walls. *Clause 6.5.3(6)P* *Clause 6.5.3(7)P*

The application of *equation* (*6.2*) in the three Design Approaches is similar to the procedure outlined in the section on bearing resistance. R_d can be written as follows: *Clause 6.5.3(8)P*

- *Drained conditions*:

$R_d = V_d' \tan \delta_d$	when the ground properties are factored (*equation* (*6.3a*))
$R_d = V_d' \tan \delta_k/\gamma_{R,h}$	when the ground resistances are factored and the actions are factored at their source (*equation* (*6.3b*))
$R_d = V_k' \tan \delta_k/\gamma_{R,h}$	when the ground resistances are factored and the effects of actions are factored (*equation* (*6.3a*), see the note).

- *Undrained conditions*: *Clause 6.5.4(11)P*

$R_d = A_c c_{u,d}$	when the ground properties are factored (*equation* (*6.4a*))
$R_d = A_c c_{u,k}/\gamma_{R,h}$	when the ground resistances are factored (*equation* (*6.4b*)).

It should normally be assumed that the soil at the interface with a concrete structure will be disturbed. Hence, critical state (constant volume) angles of shearing resistance are usually relevant at the interface, even if higher values of the angle of shearing resistance are used in the main body of the soil. Thus, the design value of the structure–ground interface friction angle, δ_d, should be deduced from a cautious estimate of the critical state angle of shearing resistance: $\delta_d = \varphi'_{cv,d}$ for cast-*in-situ* concrete and $\delta_d = \frac{2}{3}\varphi'_{cv,d}$ for smooth, precast concrete foundations; any effective cohesion, c', should be neglected. This illustrates that, for the same soil, two different characteristic values may be relevant for two different ULSs *Clause 6.5.3(10)*

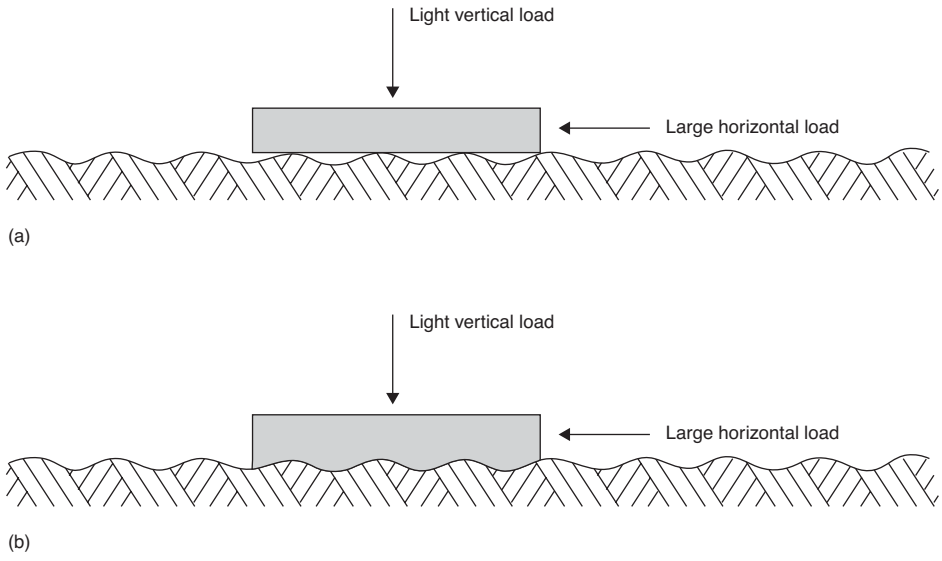

Fig. 6.6. (a) Light precast footing subjected to horizontal load. (b) Cast-*in-situ* footing fitting intimately to the ground

of the same structure: vertical bearing resistance failure may be governed by peak values of the angle of shearing resistance, while sliding at the soil–structure interface may be governed by the critical state angle of shearing resistance.

Clause 6.5.3(11)P *Equation* (*6.4*) is mainly relevant for the sliding of bases on clay or weak rock, for which undrained shear strength could be relevant, especially with rapid loading conditions. The contact area, A_c, is restricted to the compressed area under design loads.

Because, in some circumstances, the vertical load may be insufficient to produce full contact between the soil and the foundation, *inequality* (*6.5*) limits the design resistance to $0.4V_d$ in undrained conditions. Consider, for example, a light, precast base subjected to a large horizontal force, as shown in Fig. 6.6a. In order to calculate the available horizontal resistance, the contact area must be derived as a function of the vertical force and the vertical bearing resistance, with allowance for load inclination. Mortensen (1983) has shown that calculations of this type give a result which can be summarized as *inequality* (*6.5*). In some cases of rapid loading, for footings which fit intimately onto the ground surface, suction may ensure that no gap can form between the ground and the footing (Fig. 6.6b). In these cases, *inequality* (*6.5*) can be disregarded.

Clause 6.5.3(13)

6.3.3. Loads with large eccentricities

Clause 6.5.4(1)P EN 1997-1 does not place a specific limit on the degree of eccentricity of the load on the foundation; however, special precautions are required when the resultant force lies outside the middle two-thirds of the foundation. Although it is not stated, it may be assumed that the resultant force considered is the ULS force. The commonly used 'middle third model' (on the basis of SLS forces and material properties) is useful as it helps the designer to assess if part of the foundation will lose contact with the ground during loading; it is, however, not a requirement as EN 1997-1 puts no limits on the eccentricity of the load (see also Example 6.2).

When an eccentric load lies outside the middle-third of the foundation, it is likely that elastic calculations of rocking will underestimate the movements, if these are required to check if structural failure or second-order effects in the supported structure could occur, or if serviceability limits are exceeded.

The precautions to be taken when large eccentricities could occur include:

- careful review of the design value of the actions, as small deviations may have detrimental effects on safety when the load is very eccentric
- taking account of the magnitude of the construction tolerances, as constructing a foundation slightly too small may have detrimental effects on the safety when the load is very eccentric.

6.3.4. Structural failure due to foundation movement

Clause 6.5.5

A ULS may be reached in a supported structure by displacements of the ground, even if no unlimited plastic mechanism has occurred in the ground. Examples of ground movements that may cause a ULS in the structure, or severe damage, are:

- large settlements or horizontal displacements, e.g. in soft clays loaded beyond the pre-consolidation pressure
- severe settlements caused by (artificial) groundwater lowering, desiccation due to tree roots, etc.
- swelling of clays due to variations in water content (volume expansion of partly saturated soil)
- collapsing soils
- settlements of loose fills due to vibrations, inundation, etc.

It is difficult to establish general rules for allowable foundation displacements, and EN 1997-1 gives no advice on suitable values, except for some information in *Annex H* indicating that a relative rotation of about 1/150 or more is likely to cause a ULS in the supported structure.

For conventional problems (i.e. conventional structures and loadings in ground conditions for which experience exists), the ULS partial factors given in *Annex A* may be regarded as providing sufficiently low mobilization of ground strength to avoid ULSs in the structure due to ground movements, at least for drained soil with angles of shearing resistance not less than about 25–27°, and of reasonable stiffness and density.

For clays which are loaded rapidly enough to remain in an undrained condition, the partial factor on c_u in DA-1, for instance, is small, and is usually insufficient to prevent large settlements due to approaching plastic failure. For soils with low angles of shearing resistance, such as soft clays and organic soils, settlement analyses are required to check against ULSs in the supported structure.

Presumed bearing pressures based on comparable experience should be low enough to avoid settlement problems leading to failure in the supported structure.

When ULSs in the supported structure subjected to (differential) settlements are checked, design values of (differential) settlements are to be imposed.

Figure 6.7 illustrates the situation for a continuous beam on three supports for which it is required to check the bending moment and shear force at the middle support induced by the imposed settlement of the end support.

Design values of the settlement under the relevant design value of the load may, ideally, be assessed from a 'characteristic' load–settlement curve of the foundation; a 'characteristic' load–settlement curve is a cautious estimate of the load–settlement curve. This can be obtained by test (but this is not common) or by calculation. A load–settlement curve up to failure usually has the shape of curve 1 in Fig. 6.8a. Above a certain value of the load, the curve becomes significantly non-linear, and the effect of the action (i.e. the settlement) increases more than the action (i.e. the load). This downward curvature is due to local yielding of the soil beneath the foundation. For such a shape, according to EN 1990, clause 6.3.2(4), 'design' values of settlements are read from the characteristic load–settlement curve at V_d, the design value of the ULS load to be checked.

The characteristic load–settlement curve may be assessed using Terzaghi's logarithmic settlement formula (Fig. 6.8b) using characteristic values of deformation parameters. This formula assumes that no significant yield occurs below the foundation. Using this method, the calculated settlement increases less than the load. For such a shape, according

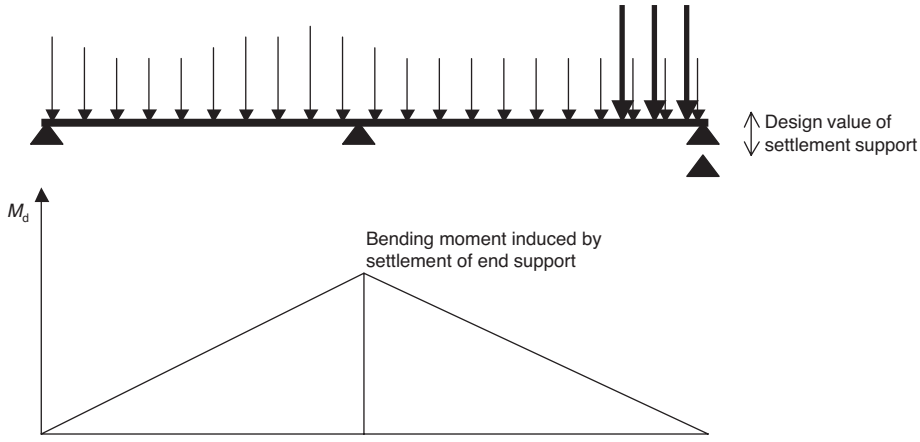

Fig.6.7. Example of check against structural failure in a continuous beam on three supports by exceeding the design value of the bending resistance at the middle support due to large settlement of end support

to EN 1990 (clause 6.3.2(4)), ULS 'design' values of settlements are deduced from the characteristic load–settlement curve by applying the ULS action factor to the 'characteristic' settlement obtained for V_k, the characteristic value of the action.

The characteristic load–settlement curve may be assessed using adjusted elasticity formulae (Fig. 6.8c) and characteristic values of deformation parameters. Adjusted elasticity formulae assume that no significant yield occurs below the foundation. Using such formulae, the calculated settlement increases linearly with the load. For a linear relationship, the 'design' value of settlement, s_d, obtained at V_d, the ULS design value of the load, and s_d obtained by multiplying the settlement s_k at V_k, the ULS characteristic value of the load, by the action factor, are the same.

It should be emphasized that Terzaghi's settlement formula and adjusted elasticity methods are only reliable when the value of the load is small compared with the failure load. The resulting settlements cannot be extrapolated to a complete load–settlement curve. Their use to check for ULSs in the structure should be restricted to situations where plastic behaviour in the soil does not affect the load–settlement curve significantly, or where a correction may be made for plastic behaviour.

When such ULS design values of settlements are entered into the structural calculation, the resulting internal moments and shear forces are ULS design values (i.e. M_d, S_d) to which the requirements of the relevant structural Eurocode apply.

6.4. Direct method: SLS design by settlement calculations

Clause 6.4(5)P
Clause 2.4.9

When the direct method is used, settlement calculations have to be performed and their results compared with limiting values. Limiting values should be established for the foundation movements, depending on several factors, of which a list is given. In the absence of specified limiting values of deformations of the supported structure, the values of structural deformations and foundation movements given in *Annex H* (informative) may be used. *Annex H* is based on the state-of-the-art report by Burland *et al.* (1977).

Not only should deformations due to the load on the foundation be considered, but also any other source of settlement such as self-weight compaction, crushing of sand, effects of vibrations, flooding, water table lowering or rise, and collapse of soil structure.

Clause 6.6.1
Clause 6.6.2

General requirements and recommendations are given for the assessment of SLSs and limiting values of foundation displacements. *Annex F* gives sample (analytical) methods for the evaluation of settlements. Although not quoted in EN 1997-1, EN 1997-2 gives four

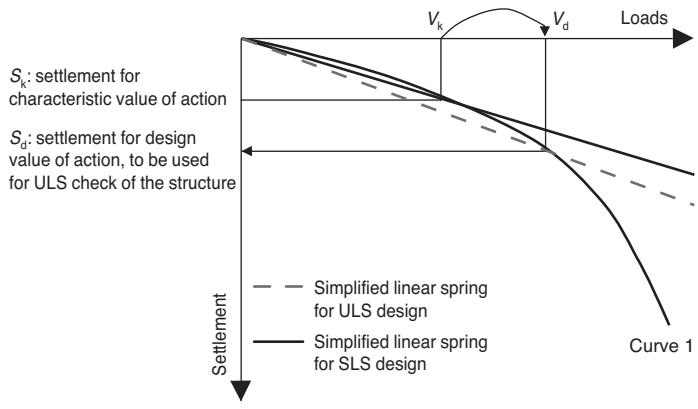

Fig. 6.8. (a) Evaluation of the design value of the imposed settlement s_d when the effect of the load (the settlements) increases more than the load: the design value of the settlement is read from the characteristic load settlement curve for the design value of the action V_d

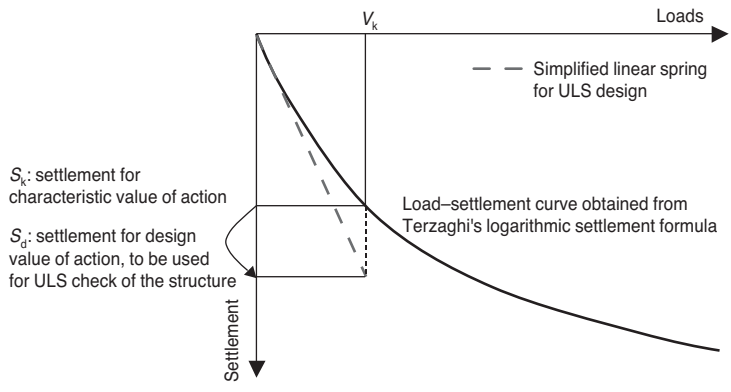

Fig. 6.8. (b) Evaluation of the design value of the imposed settlement s_d when the effect of the load (the settlement) increases less than the load: the design value of the settlement is obtained by multiplying the settlement for characteristic load, read from the characteristic load–settlement curve, by the action factor

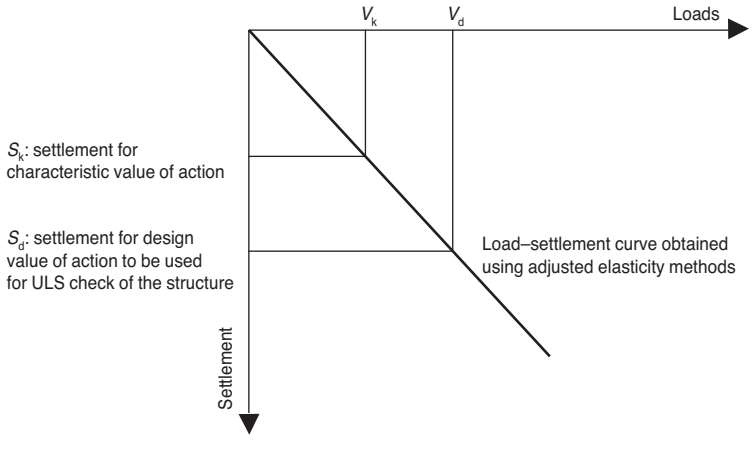

Fig. 6.8. (c) Evaluation of the design value of the imposed settlement s_d when the effect of the load (the settlements) increases linearly with the load

sample methods for calculating settlements from *in situ* measurements using semi-empirical calculation models (EN 1997-2, Annexes B2, C2 and D4).

Clause 2.4.8(2) Usually, the partial factors for checking SLSs by settlement calculations are equal to 1.0, and are applied to the representative values of the actions in the SLS (see also EN 1990 for load combinations), as well as to the characteristic values of the deformation parameters of the ground. The characteristic values of the deformation parameters should be selected according to the principles of *clause 2.4.5*, and thus are cautious estimates. Items such as stress and strain level, variability, and stiffness of the structure should be carefully considered. EN 1997-1 offers some generally accepted rules of good practice for settlement calculation. The designer should concentrate on variability and the range of values for the soil volume affected rather than on the 'mean' values.

Clauses 6.6.2(1) to 6.6.2(15)

Clause 6.6.1(8)P When calculating the settlement of a footing, interaction with neighbouring footings has to be considered.

6.5. Indirect method: simplified SLS method

6.5.1. General

Clause 6.4(5)P Indirect methods use comparable experience and the results of field or laboratory measurements or observations, chosen in relation to SLS loads, to satisfy the requirement of all relevant limit states. The indirect method, therefore, satisfies the SLS and, implicitly, also the ULS, at least for common structures for which comparable experience exists and for which no exceptional loading or ground conditions apply. The indirect method differs from the direct method in that only one analysis is performed to check both ULSs and SLSs. The indirect method is well-suited to routine Geotechnical Category 2 problems. As a minimum, Geotechnical Category 3 problems should be treated using the direct method.

Clause 2.4.1(4)P Besides the requirement of comparable experience and the relation to SLS loads, EN 1997-1 gives no clear guidance on how to apply the indirect method. Based on the stated general principle, it can be understood that the indirect method may consist of:

- either performing an SLS settlement calculation or
- limiting the mobilization of the ground resistance calculated using the models (analytical or semi-empirical) for the bearing resistance, to avoid exceeding the SLS.

As there is rather limited experience with the first-mentioned procedure, this will not be treated further in this guide.

6.5.2. Indirect method based on limiting the mobilization of bearing resistance

At least for simple ground and loading conditions, experience of classical design indicates that foundations behave satisfactorily for serviceability, and therefore automatically for persistent and transient ULS requirements, when the foundation dimensions have been determined with a sufficiently high value of the overall safety factor on bearing resistance (e.g. safety factor greater than 2.5–3). This experience has been gained with analytical as well as with semi-empirical calculation models.

Clause 2.4.8(4) For the indirect method, EN 1997-1 states that '*it may be verified that a sufficiently low fraction of the ground strength is mobilised to keep deformations within the required serviceability limits*'. This is a statement of traditional practice. Limiting the mobilization of ground resistance can be achieved by:

- Comparing the serviceability loads to the bearing resistance divided by a sufficiently large 'global' mobilization factor. Values of this 'global' factor may be taken from traditional practice.
- Comparing the serviceability loads to the bearing resistance calculated by applying a sufficiently large 'mobilization factor' directly to the shear strength parameters. There is

less experience with values of these 'partial mobilization' factors, but it may be expected that such experience will quickly grow in the future.

Both methods can be applied when analytical formulae (e.g. in *Annex D*) are used; when semi-empirical rules (e.g. in *Annex E*) are used, only a 'global' mobilization factor can be applied.

EN 1997 gives no indication on which combination of actions for SLSs as defined in EN 1990 (clause 6.5.3) is to be considered when applying the indirect method. As irreversible limit states are considered in the indirect method, the characteristic combination is appropriate.

In this indirect method, the SLS settlements are expected not to be exceeded. This 'simplified method' for checking SLS is thus a way to apply the indirect method in which SLSs and ULSs are checked together.

Some indications are given of what could be considered to be 'a sufficiently low mobilized resistance' in (medium-to-stiff) clays when using the simplified method. Similar figures are often applied to medium-dense and dense sand, but are, strangely, not given in EN 1997-1.

The use of the simplified method for SLS checking is subject to the following conditions: *Clause 2.4.8(4)*

(1) Well-established and documented successful experience must exist.
(2) There is no explicit settlement limit specified for checking SLSs and ULSs in the supported structure due to foundation movements.
(3) Exceptional loading conditions do not prevail, such as for highly inclined or eccentric loads, highly variable or cyclic loads or climatic loads (such as snow and wind). Where such exceptional loading conditions prevail, extreme care is required, and the authors do not recommend the use of semi-empirical methods for lightweight structures.
(4) The method is not applicable for soft clays and for highly organic soils, for which settlement calculations are always required. *Clause 6.6.1(3)P*

The indirect method consists of a very simple procedure that corresponds to traditional practice, with no calculation of settlements being required. In many design situations, the strength parameters of the ground (tan φ' and c' or c_u) are known with much greater confidence than the ground deformation parameters, and consequently the simplified method may be more appropriate than settlement calculations.

6.6. Prescriptive method

Prescriptive methods should be applied in the context defined in *clause 2.5*. A sample method for deriving the presumed bearing resistance for spread foundations on rock is given in *Annex G*. *Clause 6.5.2.4*

6.7. Structural design *Clause 6.8(1)P*

The structural design of the foundation involves checks against ULSs occurring in the foundation element. A check against SLSs (e.g. crack width) may also be relevant.

The values of the internal bending moments and shear forces in the foundation element, for ULSs and SLSs, are obtained by integrating the bearing pressures under the foundation, the size of which has been determined to resist geotechnical failure (or the requirements of serviceability should these lead to a larger foundation size).

For ULS structural design, the bearing pressures under the foundation are deduced from the ULS design values of the actions, i.e. values including the partial action factors γ_G and γ_Q and the partial material factors γ_M. It is important to treat all known values of water pressures as actions as their effect is often unfavourable for the bending moments and internal forces (e.g. upward water pressure under a raft); the water pressures are then multiplied by the corresponding action factor (recommended values for the three Design Approaches are given in *Table A.3*).

It should be noted that DA-1 Combination 2 is not relevant for the structural design when the ground strength plays no role in the assessment of the bearing pressure under the foundation (this is always the case for conventional methods for the assessment of the bearing pressures). In DA-1, the structural design of spread foundations is then performed with the set of action factors of Combination 1, although usually the size of the foundation has been determined using Combination 2.

Clauses 6.8(2) to 6.8(6)

EN 1997-1 differentiates between stiff and flexible foundations, without giving any guidance on how to do this. Similarly, no guidance is given on the domains of applicability or the relative merits and limitations of subgrade reaction (spring) and continuum models. The choice is left to the designer's judgement and experience and to guidance in the literature. Compatibility of strains at a limit state should be considered. Detailed interaction analysis may be needed.

Clause 2.4.1(13)
Clause 6.8(6)

The distribution of bearing pressures to be used for the SLS check of the foundation (e.g. crack width) is deduced from the relevant SLS combinations of actions according to EN 1990 and by accounting for the deformations of the ground and the foundation.

Example 6.1: square pad foundation on soft clay

Introduction

This is an example of the ULS design of a footing, using the direct method with the sample analytical procedure of *Annex D*. Undrained and drained conditions are considered. ULS calculations, for persistent and transient situations, are performed for the three Design Approaches. ULS accidental situations should also be checked, where relevant, but, for simplicity, the calculations are not presented in this example. When using the direct method, the SLS should be checked using settlement calculations, which are also not presented in this example.

Description of the problem

A 0.5 m thick, square pad foundation, bearing on soft clay 1 m below ground level, carries a vertical, centric, permanent load of 270 kN and a variable load of 70 kN. The characteristic values of soil properties and other relevant data are shown in Fig. 6.9. The water table is at the ground surface. For simplicity, the cross-section of the column on the foundation is neglected.

As the load is applied at the centre of the pad and no moment acts on it, the effective width and the effective length of the foundation are equal to their nominal values, i.e. $B' = B$ and $L' = L$; thus $A' = A$.

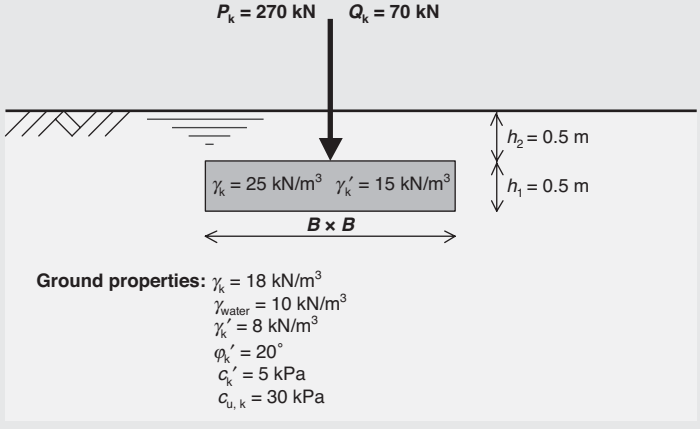

Fig. 6.9. Problem geometry, characteristic values of actions and ground properties

ULS design using analytical calculations

The minimum footing size is assessed for each Design Approach.

(a) Undrained conditions

The analysis is performed in total stresses.

Design Approach 1 Combination 2

The requirement $V_d \leq R_d$ is checked for a 1.7 m × 1.7 m pad.

The design value of the actions (including the weight of the foundation and the backfill on it ($G_{pad,\,k} = 1.7^2 \times (0.5 \times 18 + 0.5 \times 25) = 62$ kN) is obtained using the action factors of set *A2* in *Table A.3*:

$$V_d = \gamma_G(P_k + G_{pad,\,k}) + \gamma_Q Q_k$$

$$V_d = \mathbf{1.0} \times (270 + 62) + \mathbf{1.3} \times 70 = 423 \text{ kN}$$

The design value of the vertical bearing resistance is calculated using *equation* (*D.1*) of *Annex D*, and applying the partial factors to undrained strength of set *M2* in *Table A.4*; the partial resistance factor $\gamma_{R,\,v}$ is equal to 1.0 according to set *R1* in *Table A.5*.

$$R_d/A' = (\pi + 2)c_{u,\,d}b_c s_c i_c + q_d$$

Thus

$$c_{u,\,d} = c_{u,\,k}/\gamma_{cu} = 30/\mathbf{1.4} = 21.4 \text{ kPa}$$

$$s_c = 1.2 \text{ (square shape: } B'/L' = 1)$$

$$b_c = 1 \text{ (horizontal base and soil surface); } i_c = 1 \text{ (vertical loads)}$$

$$q_d = (\gamma/\gamma_\gamma)(h_1 + h_2) = (18/\mathbf{1.0}) \times (0.5 + 0.5) = 18 \text{ kPa}$$

and

$$R_d/A' = (3.14 + 2) \times 21.4 \times 1 \times 1.2 \times 1 + 18 \times 1.0 = 150 \text{ kPa}$$

The design value of the vertical bearing resistance of the foundation (1.70 m × 1.70 m) is then

$$R_d = 150 \times 1.7 \times 1.7 = 433 \text{ kN}$$

The requirement $V_d \leq R_d$ is fulfilled as 423 kN < 433 kN.

Design Approach 1 Combination 1

The requirement $V_d \leq R_d$ is checked for the 1.7 m × 1.7 m pad sized in Combination 2.

The design value of the actions (including the weight of the foundation and the backfill on it) is obtained using the action factors of set *A1* in *Table A.3*:

$$V_d = \mathbf{1.35} \times (270 + 62) + \mathbf{1.5} \times 70 = 553 \text{ kN}$$

The design value of the vertical bearing resistance is calculated using equation (*D.1*) of *Annex D*, and applying the partial factors on undrained strength of set *M1* of *Table A.4*; the partial resistance factor $\gamma_{R,\,v}$ is equal to 1.0 according to set *R1* in *Table A.5.* Thus

$$c_{u,\,d} = 30/\mathbf{1.0} = 30 \text{ kPa}$$

$$s_c = 1.2 \text{ (square shape: } B'/L' = 1)$$

$$b_c = 1 \text{ (horizontal base and soil surface); } i_c = 1 \text{ (vertical loads)}$$

$$q_d = (\gamma/\gamma_\gamma)(h_1 + h_2) = (18/\mathbf{1.0}) \times (0.5 + 0.5) = 18 \text{ kPa}$$

and

$R_d/A' = (3.14 + 2) \times 30 \times 1.2 \times 1 \times 1 + 18 \times 1.0 = 203$ kPa

The design value of the vertical bearing resistance of the foundation (1.70 m × 1.70 m) is then

$R_d = 203 \times 1.7 \times 1.7 = 586$ kN

The requirement $V_d \leq R_d$ is fulfilled as 553 kN < 586 kN

The GEO ULS design requirements are fulfilled for both Combinations 1 and 2. The design for DA-1 is governed by Combination 2 as the ratio R_d/V_d is smaller for Combination 2 than for Combination 1.

The equivalent deterministic overall factor of safety is

$\text{OFS} = R_k/(P_k + Q_k + G_{pad}) = 586/(270 + 70 + 62) = 586/402 = 1.46$

This value is very low compared with the values used in traditional design.

Design Approach 2

The requirement $V_d \leq R_d$ is checked for a 2.0 m × 2.0 m pad.

The design value of the actions (including the weight of the foundation and the backfill on it) is obtained using the action factors of set *A1* in *Table A.3*:

$V_d = \mathbf{1.35} \times (270 + 86) + \mathbf{1.5} \times 70 = 585$ kN

The design value of the vertical bearing resistance is calculated using *equation* (*D.1*) of *Annex D*, in which characteristic values of soil properties are introduced (the material factor $\gamma_{c,u}$ is equal to 1.0 in *Table A.4*), and applying the partial factor $\gamma_{R,v}$ of set *R2* to the calculated (characteristic) undrained resistance ($\gamma_{R,v} = 1.4$ in *Table A.5*). Thus

$c_{u,k} = 30$ kPa

$s_c = 1.2$ (square shape: $B'/L' = 1$)

$b_c = 1$ (horizontal base and soil surface); $i_c = 1$ (vertical loads)

$q_k = 1.0 \times 18 = 18$ kPa

and

$R_k/A' = (3.14 + 2) \times 30 \times 1.2 \times 1 \times 1 + 18 \times 1.0 = 203$ kPa

As $R_d = R_k/\gamma_{R,v} = R_k/1.4$, the design resistance of the foundation ($A' = 2.0$ m × 2.0 m) becomes

$R_d = 203 \times 2 \times 2/\mathbf{1.4} = 580$ kN

The GEO requirement $V_d \leq R_d$ may be considered as being fulfilled as 585 kN ≅ 580 kN.

The equivalent deterministic overal lfactor of safety is OFS = 812/426 = 1.91.

Design Approach 3

The requirement $V_d \leq R_d$ is checked for a 2.0 m × 2.0 m pad.

The actions are 'structural actions'. Their design values (including the weight of the foundation and the backfill on it) are obtained using the action factors of set *A1* in *Table A.3*, because all actions are structural actions:

$V_d = \mathbf{1.35} \times (270 + 86) + \mathbf{1.5} \times 70 = 585$ kN

The design value of the vertical bearing resistance is calculated using *equation* (*D.1*) of *Annex D*, and applying the partial factors to undrained strength of set *M2* of *Table A.4*; the partial resistance factor $\gamma_{R,v}$ is equal to 1.0 according to set *R3* in *Table A.5*. Thus

Table 6.2. Results for undrained conditions

	DA-1	DA-2	DA-3
Size (m × m)	1.70 × 1.70	2.00 × 2.00	2.00 × 2.00
Equivalent overall factor of safety	1.46	1.91	1.91

$c_{u,d} = c_{u,k}/\gamma_{cu} = 30/\mathbf{1.4} = 21.4$ kPa

$s_c = 1.2$ (square shape: $B'/L' = 1$)

$b_c = 1$ (horizontal base and soil surface); $i_c = 1$ (vertical loads)

$q_d = (\gamma/\gamma_\gamma)(h_1 + h_2) = (18/\mathbf{1.0}) \times (0.5 + 0.5) = 18$ kPa

and

$R_d/A' = (3.14 + 2) \times 21.4 \times 1.2 \times 1 \times 1 + 1.0 \times 18 = 150$ kPa

The design value of the vertical bearing resistance of the foundation (2.0 m × 2.0 m) is then

$R_d = 150 \times 2.0 \times 2.0 = 600$ kN

The requirement $V_d \leq R_d$ is fulfilled as 586 kN < 600 kN.
The equivalent deterministic overall factor of safety is OFS = 812/426 = 1.91

Comparison of results for undrained conditions
Table 6.2 summarizes the calculation results for the three Design Approaches in undrained conditions.

The equivalent overall factor of safety found in DA-1 may seem small compared with values commonly found in traditional practice. But the final size of the footing depends also on the SLS check, and it can be argued that, in traditional practice, the SLS requirement usually governs the size of the footing. Thus, the result can be compared with traditional practice only when the SLS has been checked. The SLS can be checked by calculating the settlement or by the simplified method.

Clause 2.4.8(4)
Clause 6.6.2(16)

(b) Drained conditions
The ULS requirement is written in terms of effective stress. As all the water pressures are from the same single source, the same factor is applied to them, and they cancel out. The actions due to the weight of the submerged footing and to the backfill are their effective weights. Thus, the action factor applies to the effective (buoyant) weight of the submerged soil and of the footing. The design value of the action on the ground is then given by

$$V_d = \gamma_{G,\,unfav} V_k + \gamma_{Q,\,unfav} Q_k + (\gamma_{G,\,unfav} h_2 \gamma'_k + \gamma_{G,\,unfav} \gamma'_{concrete} h_1) A$$

The values of the partial factors $\gamma_{G,\,unfav}$ and $\gamma_{Q,\,unfav}$ depend on the Design Approach adopted. The cross-section of the column has been neglected in this equation.

It should be noted that, using this equation, the action factor for unfavourable actions is applied to the effective weight of the footing and of the backfill; thus, the action factor for unfavourable actions is also applied to the favourable water pressure. This is questionable in some special cases where the water pressure plays an important role in the equilibrium and a separate factoring of the (total) weight and water forces should be considered.

Design Approach 1 Combination 2
The requirement $V_d \leq R_d$ is checked for a 1.85 m × 1.85 m pad.

Again, we start with Combination 2 as, for vertical (and slightly inclined loads), it always governs the sizing of the foundation.

The design value of the actions (including the effective weight of the foundation and of the backfill on it) is obtained using the action factors of set *A2* in *Table A.3*:

$$V_d = \gamma_{G,\,unfav}(P_k + G'_{pad,\,k}) + \gamma_Q Q_k$$

$$V_d = \mathbf{1.0} \times (270+39) + \mathbf{1.3} \times 70 = 400 \text{ kN}$$

where

$$G'_{pad,\,k} = 1.85^2 \times [(25–10) \times 0.5 + (18–10) \times 0.5] = 39 \text{ kN}$$

The design value of the vertical bearing resistance is calculated using *equation* (*D.2*) of *Annex D* and applying the partial factors of set *M2* in *Table A.4* to drained strength parameters c' and $\tan \varphi'$; the partial resistance factor $\gamma_{R,\,v}$ is equal to 1.0 according to set *R1* in *Table A.5*.

$$R_d/A' = q'N_{q,\,d}b_q i_q s_{q,\,d} + 0.5\gamma' B' N_{\gamma,\,d} b_\gamma i_\gamma s_\gamma + c'N_{c,\,d}\, b_c i_c s_{c,\,d}$$

in which

$$\varphi'_d = 16.23° \ (\tan \varphi'_d = \tan \varphi'_k/\mathbf{1.25})$$

$$c'_d = 5/\mathbf{1.25} = 4 \text{ kPa}$$

The design values of bearing capacity factors and shape factors are (see the equations in *Annex D*, inserting $\varphi = \varphi'_d$)

$N_{q,\,d} = 4.43$	$s_{q,\,d} = 1.28$	$i_q = 1.0$	$b_q = 1.0$
$N_{\gamma,\,d} = 2.00$	$s_\gamma = 0.7$	$i_\gamma = 1.0$	$b_\gamma = 1.0$
$N_{c,\,d} = 11.79$	$s_{c,\,d} = 1.36$	$i_c = 1.0$	$b_c = 1.0$

The effective overburden pressure is $q' = \gamma' D = 8 \times 1.0 = 8$ kPa.

$$R_d/A' = 8 \times 4.43 \times 1.28 + 0.5 \times 1.85 \times 2.0 \times 8 \times 0.7 + 4 \times 11.79 \times 1.36 = 120 \text{ kPa}$$

The design value of the vertical bearing resistance of the foundation (1.85 m × 1.85 m) is then

$$R_d = 120 \times 1.85 \times 1.85 = 410 \text{ kN}$$

The requirement $V_d \leq R_d$ is fulfilled as 400 kN < 410 kN.

Design Approach 1 Combination 1
The design values of the actions (including the effective weight of the foundation pad and of the backfill on it) is obtained using the action factors of set *A1* in *Table A.3*:

$$V_d = \mathbf{1.35} \times (270 + 39) + \mathbf{1.5} \times 70 = 522 \text{ kN}$$

The design value of the vertical bearing resistance is calculated using *equation* (*D.2*) of *Annex D*, and applying the partial factors of set *M1* (equal to 1.0) in *Table A.4* to drained strength parameters c' and $\tan \varphi'$; the partial resistance factor is equal to 1.0, according to set *R1* in *Table A.5*.

The design values of bearing capacity factors and shape factors are obtained using $\varphi = \varphi'_d = \varphi'_k$; $c' = c'_d = c'_k$ and the inclination factors i and b are equal to 1.0:

$N_{q,\,d} = 6.40$	$s_{q,\,d} = 1.34$	$i_q = 1.0$	$b_q = 1.0$
$N_{\gamma,\,d} = 3.93$	$s_\gamma = 0.7$	$i_\gamma = 1.0$	$b_\gamma = 1.0$
$N_{c,\,d} = 14.83$	$s_{c,\,d} = 1.40$	$i_c = 1.0$	$b_c = 1.0$

The effective overburden pressure is $q_d = (\gamma/\gamma_\gamma)(h_1 + h_2) = (8/\mathbf{1.0}) \times (0.5 + 0.5) = 8$ kPa.

$R_d/A' = 8 \times 6.40 \times 1.34 + 0.5 \times 1.85 \times 3.93 \times 8 \times 0.7 + 5 \times 14.83 \times 1.40 = 193$ kPa

The design value of the vertical bearing resistance of the foundation (1.85 m × 1.85 m) is then

$R_d = 193 \times 1.85 \times 1.85 = 660$ kN

The requirement $V_d \leq R_d$ is fulfilled as 522 kN < 660 kN.

The GEO ULS design requirements are fulfilled for both Combinations 1 and 2. The design for DA-1 is governed by Combination 2.

Note that the design value of the bearing resistance for Combination 1 is equal to the characteristic value of the bearing resistance.

The equivalent deterministic overall factor of safety is

$\text{OFS} = R_k/(P_k + Q_k - W_k + G_{pad}) = 193 \times 1.85^2/(270 + 39 + 70) = 660/379 = 1.74$

Design Approach 2

The requirement $V_d \leq R_d$ is checked for a 1.95 m × 1.95 m pad.

The design value of the actions (including the effective weight of the foundation and of the backfill on it) is obtained using the action factors of set *A1* in *Table A.3*:

$V_d = \mathbf{1.35} \times (270 + 44) + \mathbf{1.5} \times 70 = 530$ kN

The design value of the vertical bearing resistance is calculated using *equation* (*D.2*) of *Annex D*, in which the partial factors of set *M1* in *Table A.4* are applied to characteristic values of soil shear strength parameters c' and $\tan \varphi'$ and the partial resistance factor of set *R2* of *Table A.5* ($\gamma_{R,v} = \mathbf{1.4}$) is applied to the calculated (characteristic) resistance. The design value of the bearing capacity factors, shape and inclination factors are equal to their 'characteristic values':

$N_{q,k} = 6.40$	$s_{q,k} = 1.34$	$i_q = 1.0$	$b_q = 1.0$
$N_{\gamma,k} = 3.93$	$s_\gamma = 0.70$	$i_\gamma = 1.0$	$b_\gamma = 1.0$
$N_{c,k} = 14.83$	$s_{c,k} = 1.40$	$i_c = 1.0$	$b_c = 1.0$

$R_k/A' = 8 \times 6.40 \times 1.34 + 0.5 \times 1.95 \times 3.93 \times 8 \times 0.70 + 5 \times 14.83 \times 1.40 = 194$ kPa

Applying the partial resistance factor $\gamma_{Rv} = \mathbf{1.4}$ to the characteristic resistance yields

$R_d/A' = 194/\mathbf{1.4} = 139$ kPa

$R_d = 139 \times 1.95 \times 1.95 = 529$ kN

The GEO requirement $V_d \leq R_d$ is fulfilled as 530 kN < 529 kN.

The equivalent deterministic overall factor of safety is

$\text{OFS} = R_k/V_k = R_k/(P_k + Q_k - W_k + G_{pad}) = 738/(270 + 44 + 70) = 738/384 = 1.92$

Design Approach 3

The requirement $V_d \leq R_d$ is checked for a 2.15 m × 2.15 m pad.

The actions are 'structural actions'. Their design value (including the effective weight of the foundation pad and of the backfill on it) is obtained using the action factors of set *A1* in *Table A.3*:

$V_d = \mathbf{1.35} \times (270 + 53) + \mathbf{1.5} \times 70 = 541$ kN

The design value of the vertical bearing resistance is calculated using *equation* (*D.2*) of *Annex D*, and applying the partial factors of set *M2* in *Table A.4* to drained strength

Table 6.3. Results for drained conditions

	DA-1	DA-2	DA-3
Size (m × m)	1.85 × 1.85	1.95 × 1.95	2.15 × 2.15
Equivalent overall factor of safety	1.74	1.92	2.30

parameters c' and tan φ'; the partial resistance factor γ_{Rv} is equal to 1.0, according to set *R3* in *Table A.5*:

$N_{q,d} = 4.43$ $\quad s_{q,d} = 1.28$ $\quad i_q = 1.0$ $\quad b_q = 1.0$

$N_{\gamma,d} = 2.00$ $\quad s_\gamma = 0.7$ $\quad i_\gamma = 1.0$ $\quad b_\gamma = 1.0$

$N_{c,d} = 11.79$ $\quad s_{c,d} = 1.36$ $\quad i_c = 1.0$ $\quad b_c = 1.0$

The effective overburden pressure is $q' = \gamma' D = 8 \times 1.0 = 8$ kPa.

$$R_d/A' = 8 \times 4.43 \times 1.28 + 0.5 \times 2.15 \times 2.0 \times 8 \times 0.7 + 4 \times 11.79 \times 1.36$$
$$= 121.5 \text{ kPa}$$

$$R_d = 2.15 \times 2.15 \times 121.5 = 562 \text{ kN}$$

The GEO requirement $V_d \leq R_d$ is fulfilled as 541 kN < 562 kN.
The equivalent overall factor of safety is

$$\text{OFS} = R_k/V_k = R_k/(P_k + Q_k - W_k + G_{pad}) = 906/(270 + 70 + 53) = 906/393 = 2.30$$

Comparison of the results for drained conditions
Table 6.3 presents a comparison of the results.

Design for SLS

Clause 6.6.2(16)

As the direct method is used, settlement calculations are required to check the SLS. Furthermore, as the ratio of the bearing capacity of the ground at its initial undrained strength to the applied serviceability load is less than 2.5–3 (in all the Design Approaches), EN 1997-1 requires that assessments of settlements should be undertaken. The settlement calculations should be performed using SLS combinations of the actions, with action factors equal to 1.0 (see EN 1990) and characteristic values of deformation parameters, for the undrained as well as for the drained loading conditions.

The calculated settlements should be compared with the limiting values established for the structure being considered. The settlement calculations are necessary before the size of the footing can be finalized, but they are not presented here.

ULS structural design

The structural design is performed for the foundation, the dimensions of which fulfil the GEO ULS requirements and the SLS requirements. As the foundation is very stiff *Clause 6.8(2)* compared with the ground, a uniform linear distribution of the bearing pressures can be assumed.

The design value of the bending moments is

$$M_d = [\sigma_d \times (B/2)^2]/2$$
$$= [(V_d/B^2)(B/2)^2]/2$$
$$= V_d/8$$

where σ_d is the ULS design value of the bearing pressure due to column load.

Table 6.4 summarizes the calculation results for the three Design Approaches.

The required reinforcement is determined using EN 1992.

Table 6.4. ULS structural design results for the three Design Approaches

Design Approach	V_d (kN)	Pad dimension, B (m)	M_d (kN m/m)
DA-1			
Combination 1	470	1.85	59
Combination 2	361	1.85	Not relevant
DA-2	470	1.95	59
DA-3	470	2.15	59

Example 6.2: ULS design of spread foundation for a tower

Introduction

This is an example of footing design by the direct method and using the sample ULS analysis given in *Annex D*. The ULS bearing capacity calculations are performed for persistent and transient design situations using the three Design Approaches. The checking of the serviceability limit state should be done by calculating the settlement and the rocking of the footing; these calculations are, however, not presented in this example.

Description of the problem

The footing shown in Fig. 6.10 carries a tall, lightweight structure which is subjected to significant variable, horizontal loading, for example a windmill or chimney. A moment results from the horizontal load which is applied to the structure at a point 10 m above the top of the square pad footing. The footing is 2 m deep, and rests on a dry, medium-dense sand and gravel layer, the strength parameters of which are $\varphi'_k = 35°$ and $c'_k = 0$ kPa. The critical state (constant volume) value of the angle of shearing resistance is $\varphi'_{cv,k} = 30°$. The characteristic values of the permanent and variable actions and the points where they act on the structure are shown in the figure. A low characteristic value for the concrete weight density is selected, as the permanent weight would appear to be favourable.

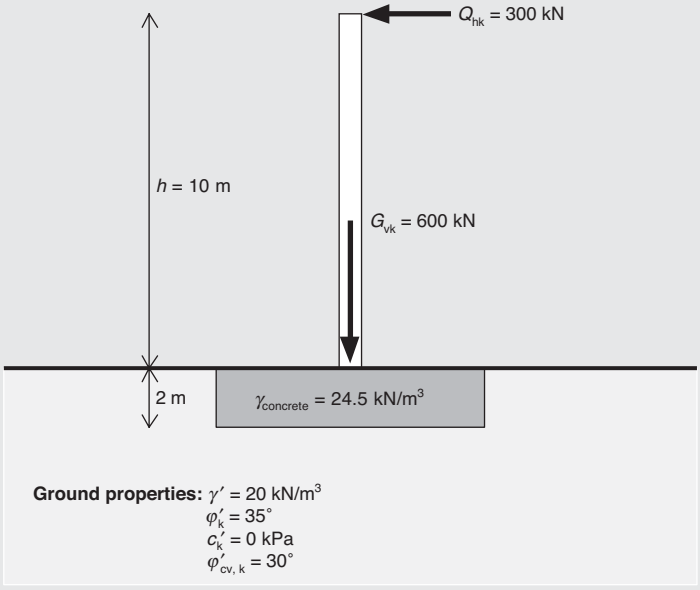

Fig. 6.10. Geometry, actions and ground properties for the example of a tall, lightweight structure

Table 6.5. Characteristic and design values of actions for the different Design Approaches (weight of the footing not included). The recommended values of partial factors in *Table A.3* are used

			DA-1 Combination 1, DA-2, DA-3: set *A1*				DA-1 Combination 2: set *A2*	
			$V_{unfavourable}$		$V_{favourable}$		$V_{unfavourable}$	
Action	Characteristic value of action (kN)	Symbol	Partial factor	Design load	Partial factor	Design load	Partial factor	Design load
Permanent								
Vertical	$G_{v,k} = 600$	γ_G	1.35	810	1.0	600	1.0	600
Variable								
Vertical	$Q_{v,k} = 0$	γ_Q	1.5	0	0	0	1.3	0
Horizontal	$Q_{h,k} = 300$	γ_Q	1.5	450	1.5	450	1.3	390

The partial factors and design values of the actions are indicated in Table 6.5 for DA-1, DA-2 and DA-3. As it is not known in advance if the vertical action $G_{v,k}$ and the weight of the footing are favourable or unfavourable to the bearing resistance, two values for γ_G in set *A1* will be considered in DA-1 Combination 1, DA-2 and DA-3. The design situation where $\gamma_G = \mathbf{1.35}$ is applied to the permanent vertical actions will be denoted '$V_{unfavourable}$'.

ULS design

Design Approach 1

Vertical bearing resistance

A footing having a size of $B \times L = 5.6$ m $\times$ 5.6 m (the characteristic value of its weight $G_{pad,k}$ is 1537 kN) is checked for both Combinations 1 and 2. The design values of actions, ground parameters, bearing capacity factors, shape factors and inclination factors are summarized in the Table 6.6. As the foundation base and soil surface are horizontal, the inclination factors *b* are all equal to 1.0. For Combination 1, it is necessary to consider the permanent vertical actions as both 'favourable' and 'unfavourable'. This is not necessary for Combination 2 as the permanent actions are multiplied by a partial factor $\gamma_G = \mathbf{1.0}$.

The recommended values of the partial factors are taken from *Table A.4* (Combination 2 – set *M2*, $\gamma_\varphi = \mathbf{1.25}$; Combination 1 – set *M1*, $\gamma_\varphi = \mathbf{1.0}$) and *Table A.5* (set *R1*, $\gamma_{Rv} = \mathbf{1.0}$). For all cases analysed in this example the basic requirement $V_d \leq R_d$ is fulfilled. Combination 1, with the permanent vertical actions taken as 'favourable', is found to be the critical case, with a required footing dimensions of 5.6 m $\times$ 5.6 m. The required minimum dimension for Combination 2 is 5.4 m $\times$ 5.4 m. Hence, Combination 1 is marginally critical for sizing of the pad footing (i.e. critical for geotechnical stability).

Sliding resistance

Clause 6.5.3(10) The angle of shearing resistance at constant volume, $\varphi'_{cv,k}$, is used when checking sliding resistance. The passive resistance in front of the foundation is neglected in this example. The 5.6 m square footing is checked against sliding resistance for both Combinations 2 and 1.

DA-1 Combination 2. The recommended value $\gamma_\varphi = \mathbf{1.25}$ indicated in set *M2* of *Table A.4* is applied to $\varphi'_{cv,k}$. For the 5.6 m square footing, the design value of the sliding resistance is given by

Table 6.6. Calculations for DA-1 Combination 2 and Combination 1, '$V_{favourable}$' and '$V_{unfavourable}$'

		DA-1 Combination 1	
Design value of	DA-1 Combination 2	$V_{favourable}$	$V_{unfavourable}$
Footing size $B \times L$ (m^2)	5.6 × 5.6	5.6 × 5.6	5.6 × 5.6
$G_{pad,\,d}$ (kN)	1537	1537	2075
G_d (kN)	600	600	810
V_d (kN)	2137	2137	2885
H_d (kN)	390	450	450
$M_d = H_d \times 12m$ (kN m)	4680	5400	5400
$i = H_d/V_d$	0.182	0.210	0.156
$e_d = M_d/V_d$ (m)	2.19	2.53	1.87
$B' = 2 \times (B/2 - e_d)$ (m)	1.22	0.54	1.85
$A' = B'L$ (m^2)	6.83	3.02	10.36
B'/L	0.22	0.10	0.33
φ_d (°)	29.3	35	35
c'_d (kPa)	0	0	0
γ' (kN/m^3)	20	20	20
q' (kPa)	40	40	40
$N_{q,\,d}$	17.00	33.30	33.30
$N_{\gamma,\,d}$	17.96	45.23	45.23
$N_{c,\,d}$	Not relevant	Not relevant	Not relevant
$s_{q,\,d}$	1.108	1.057	1.189
$s_{\gamma,\,d}$	0.93	0.97	0.90
$s_{c,\,d}$	Not relevant	Not relevant	Not relevant
m_B	1.82	1.91	1.75
$i_{q,\,d}$	0.69	0.52	0.74
$i_{\gamma,\,d}$	0.57	0.50	0.63
$i_{c,\,d}$	Not relevant	Not relevant	Not relevant
R_d/A' (kPa)	520 + 117 = 637	725 + 122 = 847	1176 + 472 = 1648
R_d (kN)	4330	2557	1790
R_d/V_d	2.03	1.19	5.92
V_d/A' (kPa)	313	707	278

$$R_{H,\,d} = [\gamma_G V_k \tan(\varphi_{cv,\,k})/\gamma_\varphi]/\gamma_{R,\,h} = (\mathbf{1.0} \times 2137 \times \tan 30°/\mathbf{1.25})/\mathbf{1.0} = 996 \text{ kN}$$

$$H_d = \mathbf{1.3} \times 300 = 390 \text{ kN}$$

The design is satisfactory since $H_d < R_{d,\,H}$.

DA-1 Combination 1. The case '$V_{favourable}$' clearly governs the design. The recommended value $\gamma_\varphi = \mathbf{1.0}$ indicated in set *M1* in *Table A.4* is applied to $\varphi_{cv,\,k}$. For the 5.6 m square footing, the design value of the sliding resistance is given by

$$R_{H,\,d} = (V_d \tan \varphi_{cvd})/\gamma_{R,\,h} = (2137 \times \tan 30°)/\mathbf{1.0} = 1136 \text{ kN}$$

$$H_d = \mathbf{1.5} \times 300 = 450 \text{ kN}$$

The design is satisfactory since $H_d < R_{d,\,H}$.

The GEO requirement for sliding is fulfilled for both Combinations 1 and 2.

Design Approach 2

Bearing resistance

Calculations using DA-2 can be performed in two ways:

(1) DA-2 – by factoring the actions at their source and calculating the bearing resistance using factored values of actions; thus, design values of eccentricity and load inclination depend on design values of the actions.
(2) DA-2* – by factoring the effects of actions and calculating the bearing resistance using characteristic values of actions; thus, design values of eccentricity and load inclination depend on the unfactored (characteristic) values of the actions.

In the first calculation, it is necessary to consider two cases: one with the permanent vertical actions as 'favourable' and the other with the actions as 'unfavourable'. In the second calculation, only the case where the vertical actions are unfavourable has to be considered, as the other case is not relevant.

Square footings having dimensions of 5.65 m × 5.65 m (characteristic value of its weight $G_{pad,k}$ = 1564 kN) and 4.8 m × 4.8 m (1129 kN) are checked in calculations 1 and 2, respectively. The design value of the bearing resistance is obtained for both calculations by applying the partial factor γ_{Rv} to R/A'. The recommended resistance factor value of 1.4 is used, as indicated in set *R2* of *Table A.5*. Values used in the calculations are shown in Table 6.7.

Clause 6.5.4(1)P

Discussion. When performing the second calculation (i.e. by calculating the eccentricity of the actions, the inclination factors, and hence R_k, using characteristic values of actions), the resulting force lies outside the middle two-thirds of the foundation (e = 2.08 m > $B/3$ = 1.6). The foundation will lose contact with the ground over more than half its width under the service loads. It is common practice (although not required by EN 1997-1) to put some limit on the eccentricity under characteristic values of actions. For instance, should it be required that less than half the foundation loses contact with the soil, the foundation should be at least 6.24 m wide.

Sliding resistance

The angle of shearing resistance at constant volume, φ'_{cv}, is used when checking sliding resistance. The passive resistance in front of the foundation is neglected in this example.

In the first calculation, where the actions are factored at their source, the case '$V_{favourable}$' clearly governs the design. The recommended value is used for the partial resistance factor $\gamma_{R,h}$ in set *R2* of *Table A.5*. The design value of the sliding resistance is given by

$$R_{H,d} = (V_d \tan \varphi_{cv,k})/\gamma_{R,h} = (\mathbf{1.0} \times (1564 + 600) \times \tan 30°/\mathbf{1.1} = 1136 \text{ kN}$$

$$H_d = \mathbf{1.5} \times 300 = 450 \text{ kN}$$

The design is satisfactory since $H_d < R_{H,d}$.

In the second calculation, where the effects of actions are factored,

$$R_{H,d} = (V_k \tan \varphi_{cv,k})/\gamma_{R,h} = (1129 + 600) \times \tan 30°/\mathbf{1.1} = 907 \text{ kN}$$

$$H_d = \gamma_Q H_k = \mathbf{1.5} \times 300 = 450 \text{ kN}$$

Again, the design is satisfactory since $H_d < R_{H,d}$.

Design Approach 3

Vertical bearing resistance

A square footing of dimensions 5.7 m × 5.7 m (characteristic value of its weight $G_{pad,k}$ = 1592 kN) is checked for DA-3. The design values of the actions, the ground parameters, the bearing capacity factors, the shape factors and inclination factors are summarized in Table 6.8. It is necessary to consider the permanent vertical actions both as '$V_{favourable}$' and as '$V_{unfavourable}$'.

The recommended values of the partial factors for material properties and resistances are taken from *Tables A.4* (set *M2*, γ_φ = **1.25**) and *A.5* (set *R3*, γ_{Rv} = **1.0**).

Table 6.7. Calculations for DA-2, R_d being calculated using design values of actions (columns 1 and 2) and R_d being calculated using characteristic values of actions (column 3)

	Calculation 1 (factoring actions at their source: *R* calculated using design values of actions)		Calculation 2 (factoring effects of actions: *R* calculated using characteristic values of actions: DA-2*)
Design value of	$V_{favourable}$	$V_{unfavourable}$	
Footing size BL (m^2)	5.65 × 5.65	5.65 × 5.65	4.80 × 4.80
$G_{pad,\,d}$ (kN)	1564	2112	$G_{pad,\,k}$ = 1129
G_d (kN)	600	810	G_k = 600
$V_d = G_{pad,\,d} + G_d$ (kN)	2164	2922	V_k = 1729, V_d = 2334
H_d (kN)	450	450	H_k = 300, H_d = 450
$M_d = H_d \times 12m$ (kN m)	5400	5400	M_k = 3600
$I = H_d/V_d$ (–)	0.208	0.154	H_k/V_k = 0.173
$e_d = M_d/V_d$ (m)	2.50	1.85	$e_k = M_k/V_k$ = 2.08
$B' = 2 \times (B/2 - e_d)$ (m)	0.65	1.95	0.64
$A' = B'L$ (m^2)	3.67	11.04	3.05
B'/L (–)	0.12	0.35	0.13
φ'_d (°)	35	35	35
c'_d (kPa)	0	0	0
γ' (kN/m^3)	20	20	20
q' (kPa)	40	40	40
$N_{q,\,d}$ (–)	33.30	33.30	33.30
$N_{\gamma,\,d}$ (–)	45.23	45.23	45.23
$N_{c,\,d}$ (–)	Not relevant	Not relevant	Not relevant
$s_{q,\,d}$ (–)	1.069	1.189	$s_{q,\,k}$ = 1.08
$s_{\gamma,\,d}$ (–)	0.96	0.90	$s_{\gamma,\,k}$ = 0.96
$s_{c,\,d}$ (–)	Not relevant	Not relevant	Not relevant
m_B (–)	1.89	1.75	1.88
$i_{q,\,d}$ (–)	0.64	0.743	$i_{q,\,k}$ = 0.70
$i_{\gamma,\,d}$ (–)	0.51	0.627	$i_{\gamma,\,k}$ = 0.58
$i_{c,\,d}$ (–)	Not relevant	Not relevant	Not relevant
R_d/A' (kPa)	(911 + 144)/1.4 = 753	(1176 + 472)/1.4 = 1178	(1006 + 161)/1.4 = 833
R_d (kN)	2763	13005	2540
R_d/V_d (–)	1.27	4.45	1.09
V_d/A' (kPa)	707	265	760

Sliding resistance

The angle of shearing resistance at constant volume, φ'_{cv}, is used when checking sliding resistance. The recommended strength factor value γ_φ= **1.25** in set *M2* in *Table A.4* is applied to $\varphi'_{cv,\,k}$. The passive resistance in front of the foundation is neglected in this example. The case '$V_{favourable}$' clearly governs the design. For the square footing of dimensions 5.7 m × 5.7 m, the design value of the sliding resistance is given by

$$R_{H,\,d} = (\gamma_{G,\,fav} V_k \tan \varphi_{cv,\,k}/\gamma_\varphi)/\gamma_{R,h} = (\mathbf{1.0} \times 2192 \times \tan 30°/\mathbf{1.25})/\mathbf{1.0} = 1022 \text{ kN}$$

$$H_d = \gamma_Q H_k = \mathbf{1.5} \times 300 = 450 \text{ kN}$$

The design is satisfactory since $H_d < R_{H,\,d}$.

Table 6.8. Calculations for DA-3

Design value of	$V_{favourable}$	$V_{unfavourable}$
Footing size BL (m^2)	5.7 × 5.7	5.7 × 5.7
$G_{pad,\,d}$ (kN)	1592	2149
G_d (kN)	600	810
V_d (kN)	2192	2959
H_d (kN)	450	450
$M_d = H_d \times 12m$ (kN m)	5400	5400
$i = H_d/V_d$ (–)	0.205	0.152
$e_d = M_d/V_d$ (m)	2.46	1.83
$B' = 2(B/2 - e_d)$ (m)	0.77	2.05
$A' = B'L$ (m^2)	4.41	11.68
B'/L (–)	0.14	0.36
φ'_d (°)	29.3	29.3
c'_d (kPa)	0	0
γ' (kN/m^3)	20	20
q' (kPa)	40	40
$N_{q,\,d}$ (–)	17.00	17.00
$N_{\gamma,\,d}$ (–)	17.96	17.96
$N_{c,\,d}$ (–)	Not relevant	Not relevant
$s_{q,\,d}$ (–)	1.07	1.18
$s_{\gamma,\,d}$ (–)	0.96	0.89
$s_{c,\,d}$ (–)	Not relevant	Not relevant
m_B (–)	1.88	1.74
$i_{q,\,d}$ (–)	0.65	0.75
$i_{\gamma,\,d}$ (–)	0.52	0.64
$i_{c,\,d}$ (–)	Not relevant	Not relevant
R_d/A' (kPa)	470 + 68 = 539	602 + 210 = 812
R_d (kN)	2325	9483
R_d/V_d (–)	1.06	3.20
V_d/A' (kPa)	500	253

Eccentricity of the load

Clause 6.5.4

For all three Design Approaches it appears that, for the large eccentricity that acts in this example, a small increase in applied horizontal force to the structure (and hence an increase in moment) would lead to overturning of the foundation. It is vital to dimension the footing to cater for this and any other unforeseen situation. In all three Design Approaches, stability is strongly adversely affected by very small decreases (of a few centimetres) of the size of the footing. EN 1997-1 therefore requires that, where the design load passes outside of the middle two-thirds of the footing, an allowance must be made for construction tolerances. This will typically require that dimensions B' and L be increased by 0.1 m.

ULS due to soil deformations

As the design action is highly eccentric and the structure is tall, the second-order effects of rotation of the foundation should be checked; as a consequence of rocking, the vertical load also becomes eccentric. The eccentricity under design values of the vertical load has to be combined with the eccentricity due to the horizontal load. If the combined eccentricity becomes significant, the ULS check of bearing resistance must be repeated for the increased eccentricity.

Design for the SLS

Owing to the large eccentricity of the load, it is strongly recommended that deformation be calculated. Rocking of the foundation and subsequent horizontal displacement of the top of the structure particularly should be examined and compared with allowable values in serviceability conditions. Calculations of deformation should be performed using characteristic values of the soil deformation parameters and of the actions.

ULS structural design

The calculations for the structural sections of the foundation require an assumption of the distribution of the ULS bearing pressures, taking due account of the area over which the foundation loses contact with the soil as a consequence of the large eccentricity of the action.

For DA-1, Combination 1 will apply.

Example 6.3: design based on the indirect method using pressuremeter test results

Introduction

In this example, a footing is designed using the **indirect method**, and the sample semi-empirical model of bearing resistance estimation based on pressuremeter tests results and given in *Annex E*. This annex should be complemented by values of the pressuremeter bearing resistance factors k_p for spread foundations given in EN 1997-2, Annex C1. *Clause 6.4(5)P*

The design of spread foundations using semi-empirical rules embodies much previous experience; for this example, using the results of pressuremeter tests, the previous experience is borrowed from French practice (Frank, 1999).

In the **indirect method**, the concept of 'Design Approaches' does not exist, as the check is based on the SLS loads.

Description of the problem

Square pads (of approximate dimensions 2 m × 2 m, depth 1 m, thickness 0.5 m, covered by 0.5 m of backfill, i.e. G_k = 84 kN) bear on medium-dense sand and support a precast, flexible industrial building. The water table is deep below the foundation level. The weight density, γ, of the soil is equal to 18 kN/m^3. The loads are vertical and act through the pad centres. The characteristic values of the permanent and variable loads are G_k = 1600 kN and Q_k = 300 kN.

Four pressuremeter (PMT) tests are performed with equal spread over the construction site. From Annex C1 of EN 1997-2, the value of the bearing resistance is given as (see also *Annex E* in EN 1997-1)

$$R/A = \sigma_{v0} + k_p p^*_{le}$$

where:

- p^*_{le} is the equivalent (characteristic) net limit pressure at the base of the foundation, calculated by a smoothing procedure (e.g. see Frank, 1999) of a cautious 'characteristic' PMT profile deduced from the four tests. In this example, p^*_{le} = 1.1 MPa.
- k_p is the bearing resistance factor. In this example the sand is 'type B', and k_p = 1.2.
- σ_{v0} is the total initial vertical stress acting at foundation level: $\sigma_{v0} = D\gamma$.

Design using the indirect method

The indirect method uses comparable experience, and covers SLS and ULS in one calculation. This example uses the semi-empirical rule given in *Annex E* for the assessment of the bearing resistance from pressuremeter test results. The comparable experience chosen in relation to the SLS loads is that the design satisfies both ULS and *Clause 6.4(5)P*

SLS requirements if the ratio of available bearing resistance to the serviceability load combination is greater than **3.0**. The indirect method becomes identical to the simplified method for checking the serviceability conditions.

The characteristic value of the equivalent limit pressure is 1.1 MPa. The characteristic value of the bearing resistance is

$R_k/A = 18 + 1.2 \times 1100 = 1338$ kPa

The most unfavourable load applied in serviceability conditions is assumed in this example to be the characteristic combination (see EN 1990, clause 6.5.3, and *Table A1.4*):

$V_k = 1600 + 84 + 300 = 1984$ kN

Adopting the ratio $R_k/V_k = 3.0$ for the indirect method leads to the required size of the footing:

$A > 1984/(1338/3.0) = 4.45$ m^2

A square footing of 2.10 × 2.10 m fulfils the requirement.

It should be pointed out that when applying the indirect method, no value of the deformation is calculated, and the real safety margin in the ULS remains unknown.

CHAPTER 7

Pile foundations

This chapter is concerned with the design of pile foundations. The material described in this chapter is covered in *Section 7* of EN 1997-1, with the values of the partial factors taken from *Annex A*. The structure of the chapter follows that of *Section 7*:

Section 7 is one of the Sections of EN 1997-1 providing the most comprehensive guidance for actually performing a design.

The core of *Section 7* is devoted to the behaviour of pile foundations under axial (vertical) loads. The importance of static load tests is clearly recognized as the basis of pile design methods. An innovative concept introduced in this section, with regard to traditional pile design, is the use of correlation factors ξ for deriving the characteristic compressive and tensile resistances of piles either from static pile load tests or from ground test results (for compressive resistance: *clauses 7.6.2.2(8)P* and *7.6.2.3(5)P*, respectively, are relevant). In both cases, the correlation factor ξ depends mainly on the number of tests performed, whether pile load tests or profiles of ground tests.

Clause 7.6
Clause 7.4.1(1)P
Clause 7.6.2.2(8)P
Clause 7.6.2.3(5)P

7.1. General

Section 7 of EN 1997-1 applies to all piles, regardless of the installation method (driving, jacking, screwing or boring with or without grouting) and their expected behaviour (whether end-bearing or friction).

Clause 7.1(1)P

Piles are meant to be used to support loads arising from a structure. Though micropiles are not mentioned explicitly, it is understood that the provisions of *Section 7* also apply to them, where relevant. It is the same for 'barrettes' and panels of diaphragm wall or sheet piles in a wall, when they are located beneath a structure and carry loads at their head (whether vertical or horizontal). When piles are only used for reducing the settlement of a spread or raft foundation (such piles are often referred to as 'creep' piles), it is stated that the provisions do not apply directly. This is because the overall factor of safety with regard to resistance failure for such piles can be (much) smaller than for standard piles, as the bearing function is provided by the spread or raft foundation.

Clause 7.1(2)

Clause 7.1(3)P It is assumed that the piles are installed in conformity with the appropriate execution standards. Such standards have already been established by CEN Technical Committee 288 (CEN/TC 288), or will be established in the near future (see Table 1.1).

7.2. Limit states

Clause 7.2(1)P When designing a pile foundation, a number of limit states need to be considered. *Clause 7.2(1)P* provides the list of the 11 most common limit states that need to be considered in the case of pile foundations. This list does not imply that calculations or other explicit checks should be carried out for all of them. The first seven limit states listed are the usual failure modes, either geotechnical or structural failures, and hence are ultimate limit states (ULSs). Of the remaining four, excessive movements (settlement, heave and lateral movements) can lead to a serviceability limit state (SLS) or to a ULS in the supported structure, while unacceptable vibrations are an SLS (see Chapter 3 in the *Designer's Guide to EN 1990*, or Chapter 2 in this guide, for a general definition of limit states).

7.3. Actions and design situations

Clause 7.3.1
Clause 2.4.2(4) When designing a pile foundation, the actions listed under *clause 2.4.2(4)* should be considered. The actions to be taken into account depend on the type of pile foundation and the particular design situation.

For pile foundations, permanent and variable loads from supported structures, surcharges and traffic loads, as well as ground movements, are the most frequent actions to be considered.

Pile foundations are usually studied separately for axial (normally vertical) and for transverse (normally horizontal) loadings.

Actions due to ground movements

The actions caused by ground movements are very specific to pile foundations, and the soil–structure interaction resulting from these ground movements, which is usually hidden in the
Clause 7.3.2.1(1)P design calculations, complicates the analyses. Typical ground movements to be considered are:

Clause 7.3.2.2 • vertical settlements causing downdrag, i.e. negative shaft friction on the piles
Clause 7.3.2.3 • upwards soil displacements causing heave
Clause 7.3.2.4 • horizontal soil displacements causing transverse loadings.

Clause 7.3.2.1(2) Most design methods for piles located in ground subject to displacements are based on a value for the action which is fixed by other considerations. In order to be on the safe side, the values of the stiffness or the resistance of the ground should be chosen as upper values. Indeed, upper values will lead in most cases to a safe estimate of the adverse effects of the ground displacements on the piles.

Clause 7.3.2.1(3)P Eurocode 7 requires that one of the following two methods is used:

- Either the ground displacement is taken as the action in the design calculations and an interaction analysis is carried out; this is the case when methods based on load transfer functions, such as t–z and p–y curves, are being used (z and y being the relative displacements of the pile with respect to the ground). The absolute ground displacement is inserted, at the beginning of the calculation, as a correction to the displacement z or y (Alonso *et al.*, 1984).
- Or the load on the pile caused by the ground movement is taken as the action. This value must be an upper bound to the characteristic value.

Note that the partial material and resistance factors given in *Annex A* are intended to provide low (conservative) design values. They are not meant to yield high (unconservative)

design values, such as the ones needed in the case of loads acting on piles caused by ground movements (e.g. downdrag). This issue is not addressed in EN 1997-1, but for this design situation the authors of this guide recommend that the partial material and resistance factors, e.g. γ_{φ}, are treated as partial action factors, and the downdrag load (a geotechnical action) is multiplied rather than divided by of the values of these factors in *Annex A* (see Example 7.4).

Downdrag (negative friction)

The usual conservative way of designing piles subjected to downdrag is to estimate the maximum (long-term) possible value of the downdrag load. An example of a pile foundation designed using the three Design Approaches of Eurocode 7 and taking into account the maximum downdrag load is given below in Example 7.4. *Clauses 7.3.2.2(1)P to 7.3.2.2(3)*

Use of the maximum possible downdrag load can lead to very conservative or even unrealistic designs, particularly when the settlements of the ground are small and/or the compressible layer is very thick. In these situations, a careful soil–pile interaction analysis should be carried out. The aim of such an analysis is to estimate, in particular, the 'neutral point' in the compressible layer, which is the depth where the downward displacement of the pile equals the downward movement of the ground around the pile, and hence the force between the soil and the pile shaft ceases being a downward action on the pile and starts to become an upward shaft resistance. As mentioned above, a design procedure using '*t–z* curves', where the profile of ground displacement is an input, is well adapted to the calculations mentioned under *clause 7.3.2.2*(*6*). *Clauses 7.3.2.2(4) to 7.3.2.2(6)* *Clause 7.3.2.2(6)*

Heave

For heave, EN 1997-1 requires that the upward movement is treated as an action and that an interaction analysis is carried out. This is because the movements are usually small enough to allow treatment in this way. *Clause 7.3.2.3(1)P*

Transverse loading

Many situations are encountered where piles are subjected to transverse loadings caused by ground movements. The design situations which need to be considered in the case of transverse loading are listed under *clause 7.3.2.4*(*2*). A particular situation where this type of loading is very common is bridge abutments on piles. *Clause 7.3.2.4(2)*

Eurocode 7 recommends a soil–pile interaction analysis in the case of transverse loading. This can be carried out using the theory of beams on linear or non-linear supports and a horizontal modulus of reaction or generalized *p–y* curves (see also *clause* 7.7). *Clause 7.3.2.4(3)* *Clause 7.7*

7.4. Design methods and design considerations

As mentioned above, the methods accepted by Eurocode 7 for the design of piles must nearly all be based, directly or indirectly, on the results of static pile load tests. This is the case, of course, when the results of static pile load tests on a specific site form the direct basis for the design. It is also the case when calculation methods are used, as their validity should be based on the results of static pile load tests 'in comparable situations', or when dynamic tests are used, as their validity should also have been demonstrated by static tests 'in comparable situations'. One notable exception is when a design method based on the observed performance of comparable pile foundations is used, provided it is 'supported by the results of ground investigation and ground testing'. *Clause 7.4.1(1)P* *Clauses 7.6.2.2* *Clause 7.6.3.2* *Clauses 7.6.2.4 to 7.6.2.6*

The design method based on the results of pile load tests is applicable to the design of piles under either axial loads and/or transverse loads. Pile load tests are the subject of the entire *clause 7.5*. *Clause 7.5*

Clause 7.4.2 provides rather long lists of items to be considered or deserving attention in the design of piles, including the choice of pile type. While it should be recognized that some *Clause 7.4.2*

of the listed requirements are not easy to fulfil explicitly, some others are normally addressed
Clause 7.4.2(2)P in common practice. When using pile load test results, it is particularly important to take account of the nature of the loading and the potential changes in the ground and groundwater conditions.

7.5. Pile load tests

Clause 7.5 The requirements for pile load tests in *Clause* 7.5 apply to both static and dynamic tests, unless otherwise stated. While some provisions clearly apply only to compression or tension piles (axial loadings), others apply to transverse as well as axial loadings.

Pile load tests are especially required when there is great uncertainty about the behaviour of piles, either because of the installation method, the ground conditions and the anticipated loadings or because unexpected behaviour was noted during installation. The general way to
Clause 7.5.1 use the pile load test results is explained in *clause 7.5.1.*

Clause 7.5.1(3) In the case of complex loadings, which are not easy to reproduce in pile load tests, Eurocode 7 states the use of load tests should be replaced by design calculations with very cautious design values for the ground parameters. This is the situation in the case of cyclic loads, for instance.

Clause 7.5.1(4)P The number and location of pile load tests on trial piles must be chosen according to the
Clause 7.5.2.2(1)P ground conditions. In particular, the most unfavourable location must be tested.

Clause 7.5.1(4)P The representivity of pile load tests is very important, as the results will directly influence
Clause 7.5.1(5)P the design of the pile.

Static load tests

Clause 7.4.1(3) Static load tests can be performed on trial piles or on working piles which will form part of the foundation.

Clause 7.5.2.1(1)P With regard to the exact test procedure, *clause 7.5.2.1*(*1*)*P* only refers, in a note, to the suggested method published in the *ASTM Geotechnical Testing Journal* (Smoltczyk, 1985), which is essentially the method normally followed in current European practice. Recently, the European Technical Committee on piles (ETC3) of the International Society for Soil Mechanics and Geotechnical Engineering (ISSMGE) has produced a recommendation document for the execution and interpretation of axial static pile load tests which is fully consistent with the definitions and philosophy of Eurocode 7 (De Cock *et al.*, 2003). This document will form the basis for the European standard being prepared by CEN/TC 341.

Clause 7.5.2.1(1)P From the measurements during static load tests, conclusions must be able to be drawn
Clause 7.6.2.2 about the deformation, creep and rebound of a pile foundation. These aspects are useful, in
Clause 7.6.3.2 particular, to check the SLS requirements. ULS calculations are often based on measured ultimate failure loads, at least for axial loading. Suprisingly, Eurocode 7 states that the designer should be able to draw conclusions about the ultimate failure load from only the loading of trial piles. However, it should be understood that it is not always necessary to bring trial piles to failure: the common practice of deriving the ultimate failure load by
Clause 7.5.2.3(2)P extrapolating the load–displacement graph can be used. In *clause* 7.5.2.3(2)P, Eurocode 7 states that working piles must be loaded to at least the design load for the foundation. Although it is not mentioned, it should be understood that this design load is the one corresponding to persistent situations.

Clause 7.5.2.1(4) When designing pile foundations for tensile loading, static load tests should always be performed to failure. The reasons for this are because it is easier to reach failure in tensile tests and because, due to the 'brittle' behaviour of piles in tension, it is dangerous to make an optimistic estimate of the ground tensile resistance by extrapolating from the load–displacement graph.

Clause 7.5.2.2(2)P For trial piles, Eurocode 7 requires a thorough ground investigation in order to be sure of
Clause 7.5.2.2(3)P the nature of the ground around the piles and beneath their bases, and full documentation of
Clause 7.9 the installation method, as for the permanent piles of a foundation.

Dynamic load tests

The use of the results of dynamic load tests for assessing the compressive resistance of piles is the subject of *clause* 7.5.3(*1*) and also *clauses 7.6.2.4*, *7.6.2.5* and *7.6.2.6,* which are concerned with dynamic impact tests, pile-driving formulae and wave equation analyses, respectively. Eurocode 7 sets the following very stringent criteria restricting the use of dynamic load tests for assessing the compressive resistance of piles to when: *Clauses 7.5.3(1)* *Clauses 7.6.2.4 to 7.6.2.6*

- an adequate site investigation has been carried out
- the method has been calibrated against static load tests on the same type of pile, of similar length and cross-section, and in comparable soil conditions.

The sentence on the stringent criteria restricting the use of dynamic load tests is repeated in each of the three clauses concerned with the determination of the compressive resistance from dynamic impact tests, pile-driving formulae and wave equation analysis. *Clauses 7.6.2.4 to 7.6.2.6*

If more than one type of dynamic test is performed, cross-checking of their results is mandatory. *Clause 7.5.3(2)P*

Load test report

Pile load tests reports are of prime importance, not only to ensure that there is no misunderstanding about the precise meaning of the test results before the actual design is finalized but also in order to extract efficiently all possible information from the tests. Thus, an extensive list of items to be reported from pile load tests is given in *clause 7.5.4*(*1*)*P*. *Clause 7.5.4(1)P*

7.6. Axially loaded piles

7.6.1. General

As already stated, *clause 7.6* is the core of the section of EN 1997-1 on pile foundations. After some general considerations, it deals successively with the determination of the compressive ground resistance and the tensile ground resistance for ULS design calculations and the vertical displacements for checking the SLS of supported structures. The structural design of the piles (including possible buckling) is the subject of *clause 7.8*. *Clause 7.6* *Clauses 7.6.1 to 7.6.4* *Clause 7.8*

The term '*ground resistance*', used in *Section 7*, means the bearing or tensile capacity of a pile. The word 'resistance' is used here to indicate that it is the maximum reaction of the ground (maximum shaft resistance and, for a pile in compression, the maximum base resistance), as opposed to being the actions applied to the ground (through a pile).

The limit states to be checked explicitly are given in *clause 7.6.1.1*(*1*)*P*. Some of the items are also listed in *clause 7.2*(*1*)*P*. The first three items on the list are ULSs: the bearing resistance failure of a single pile, the bearing resistance failure of a whole pile foundation, and the collapse or severe damage to a supported structure caused by excessive pile foundation displacements. The last item is the SLS of the supported structure caused by displacements of the foundation that exceed the agreed limiting value. *Clause 7.6.1.1(1)P* *Clause 7.2(1)P*

The ULS bearing resistance failure of a single pile and of a whole pile foundation corresponds to the traditional bearing capacity design, even if Eurocode 7 introduces some innovative features for calculating the characteristic ground resistance and if the calculations are carried out with partial factors modifying both the applied loads and the ground resistance.

For pile foundations, the calculation of displacements is not common practice, especially for a ULS in the supported structure. For piles which undergo significant settlements, Eurocode 7 requires that a cautious range of settlements is estimated. It should be noted that no further guidance is given in *Section 7* concerning the method for checking displacements corresponding to a ULS in the supported structure. The guidelines given in Chapter 6 of this guide for spread foundations are considered to be relevant to pile foundations as well. *Clause 7.6.1.1(4)P*

Compressive or tensile resistance failure is defined as the state in which the pile foundation displaces significantly downwards or upwards with negligible increase or decrease in *Clause 7.6.1.1(2)*

Table 7.1. Sets of partial factors for pile design in persistent and transient situations

Design Approach	Structural action	Geotechnical action[a]	Ground resistance
DA-1			
Combination 1	Set *A1*	Sets (*M1*) + *A1*	Sets (*M1*) + (*R1*)
Combination 2	Set (*A2*)	Sets *M2* + (*A2*)	Sets (*M1*) + *R4*
DA-2	Set *A1*	Sets (*M1*) + *A1*	Sets (*M1*) + *R2*
DA-3	Set *A1*	Sets *M2* + (*A2*)	Sets *M2* + (*R3*)

(*A2*), (*M1*), (*R1*) and (*R3*): sets *A2* (permanent actions), *M1*, *R1* (driven piles in compression) and R3 (all piles in compression) have values of partial factors equal to 1.0.
[a] Unfavourable action, e.g. negative friction or transverse loading

Clause 7.6.1.1(3) resistance. During load tests of piles in compression it is often difficult to reach this state, or to derive it from the load–settlement plot; in these cases, Eurocode 7 recommends that a pile head settlement of 10% of the pile diameter is used as the 'failure' criterion. This recommendation is important, since the ground resistance calculation methods are based on failure loads measured during static load tests, which can vary significantly depending on the failure criterion used.

Clause 7.6.1.2(1)P As in the design of spread foundations, the overall stability of pile foundations must be considered. The provisions of *Section 11* apply in the design of pile foundations as in other *Clause 7.6.1.2(2)* geotechnical designs (see also Chapter 6 of this guide). In the case of pile foundations, failure surfaces passing below the piles and also failure surfaces intersecting the piles should both be considered.

7.6.2. Compressive ground resistance (ULS)

General

Clause 7.6.2.1(1)P Compressive ground resistance for all ULSs is checked using the following basic inequality:

$$F_{c,d} \leq R_{c,d} \qquad (7.1)$$

where $F_{c,d}$ is the design axial compression load on a single pile or group of piles at the ULS, and $R_{c,d}$ is the design value of the compressive ground resistance of a single pile or group of piles at the ULS.

The ULS loads $F_{c,d}$ are determined from the combinations of actions which follow the general format of the partial factor method (see the *Designer's Guide to EN 1990*), i.e. the combinations for persistent or transient design situations (also called 'fundamental' combinations in EN 1990), the combinations for accidental situations and the combinations for seismic situations.

Clauses 7.6.2.2 to 7.6.2.6 The ultimate compressive resistance $R_{c,d}$ in *inequality* (*7.1*) can be determined from static load tests, from ground test results or on the basis of dynamic load tests.

Clause 2.4.7.3.4 The sets of partial factors of *Annex A*, applicable to pile design in persistent and transient situations for use with the three Design Approaches, are given in Table 7.1.

In the design of piles, Design Approaches 1 (DA-1) and 2 (DA-2) include resistance factoring, i.e. when calculating the ground resistance the partial factors for the ground parameters are equal to 1.0 (set *M1* in *Table A.4*) while those for resistance are greater than 1.0 (sets *R4* or *R1* – except for driven piles – for DA-1, and set *R2* for DA-2 in *Tables A. 6* to *A.8*). In contrast, Design Approach 3 (DA-3) involves material factoring, i.e. partial factors greater than 1.0 are applied to ground parameters when calculating the ground resistance (set *M2* in *Table A.4*) while those for resistance are equal to 1.0 (set *R3* for all piles in compression, in *Tables A.6* to *A.8*.

Clause 2.4.7.1(3) For accidental and seismic design situations, the combinations of actions are formed with partial factors for actions normally equal to 1.0. Eurocode 7 does not recommend values for

the partial factors on the resistances in the case of accidental situations. It is usual practice to adopt values equal to 1.0, but they can depend on the particular design situation. For the values of the partial factors on pile resistances in the case of seismic design situations, see Eurocode 8 – Part 5.

It should be noted that *inequality* (*7.1*) is valid for the whole foundation, and does not necessarily have to be checked for each individual pile independently. *Equations* (*7.2*) to (*7.11*) for $R_{c,d}$ later on in *Section 7* are intended to be used for the design of individual piles.

It is also important to note that Eurocode 7 draws attention to the fact that a ULS is only reached when a significant number of piles fail simultaneously. In fact, as long as a pile foundation does not become a mechanism (in the static sense), a ULS is not reached. A mechanism can be created by the resistance of several piles being exceeded, as well as by failure of the structure connecting the piles. *Clause 7.6.2.1(6)* *Clause 7.6.2.1(5)P*

The analysis of a ULS failure involving a whole pile foundation is not frequently applied. It requires a non-linear analysis of the load redistribution among the piles. It may be assumed, however, that similar load redistribution effects may be accounted for in a simplified way, by selecting different characteristic pile resistances depending on the stiffness of the structure. Account of the structural stiffness may be introduced in a simplified way through the factor 1.1 of *clauses 7.6.2.2*(*9*) and *7.6.2.3*(*7*). This factor should not be used when the non-elastic load redistribution is explicitly taken into account. *Clause 7.6.2.2(9)* *Clause 7.6.2.3(7)*

Eurocode 7 draws attention to two other aspects for groups of piles:

- Special care is needed for edge piles, as they are usually more heavily loaded than the other piles in the case of eccentrically loaded stiff foundations or inclined loads and have a stiffer behaviour than centre piles, and hence attract more load. *Clause 7.6.2.1(8)*
- A group of piles loaded in compression may also fail as a block, consisting of the piles and the ground contained between the piles. The code allows such a block to be treated as a single pile of large diameter. The wording of *clause 7.6.2* might be misleading because the methods and equations given in this clause do not apply to such a case; the single-pile block is usually analysed by considering the vertical bearing resistance of an equivalent raft foundation, e.g. according to the calculation methods of *Section 6*. Clearly, a check against punching failure of such an equivalent raft should be carried out, if relevant, as *clause 7.6.2.1*(*11*) also applies. *Clause 7.6.2.1(3)P* *Clause 7.6.2.1(4)* *Clause 7.6.2.1(11)*

Clauses 7.6.2.1(*9*)*P to 7.6.2.1*(*13*) draw attention to other factors to be considered when assessing the compressive resistance of single piles: *Clauses 7.6.2.1(9)P to 7.6.2.1(13)*

- the possible presence of a weak stratum below the pile base
- the geometry of the base compared with that of the shaft
- the possibility of a plug 'effect' for open-ended driven piles.

Ultimate compressive resistance from static load tests

The procedure for determining the compressive resistance of a pile from static load tests is based on analysing the compressive resistance, $R_{c,m}$, values measured in static load tests on one or several trial piles. The trial piles must be of the same type as the piles of the foundation, and must be founded in the same stratum. *Clause 7.6.2.2(2)P*

An important requirement stated in Eurocode 7 is that the interpretation of the results of the pile load tests must take into account the variability of the ground over the site and the variability due to deviation from the normal method of pile installation. In other words, there must be a careful examination of the results of the ground investigation and of the pile load tests results. The results of the pile load tests might lead, for example, to different 'homogeneous' parts of the site being identified, each with its own particular characteristic pile compressive resistance. *Clause 7.6.2.2(7)P* *Clause 7.6.2.2(11)P*

The steps of the procedure for determining the design compressive resistance of a pile foundation from static load tests are as follows:

Clause 7.6.2.2(8)P (1) From the measured compressive resistances $R_{c,m}$ determine the characteristic value $R_{c,k}$ from the following equation:

$$R_{c,k} = \text{Min}\{(R_{c,m})_{mean}/\xi_1; (R_{c,m})_{min}/\xi_2\} \quad (7.2)$$

Clause 7.6.2.2(7)P where ξ_1 and ξ_2 are correlation factors related to the number n of piles tested, and are applied to the mean $(R_{c,m})_{mean}$ and to the lowest $(R_{c,m})_{min}$ of $R_{c,m}$, respectively. The recommended values for these correlation factors, given in *Annex A*, are intended primarily to cover the variability of the ground conditions over the site. However, they may also cover some variability due to the effects of pile installation.

Clause 7.6.2.2(9) (2) If the structure connecting the piles is stiff and strong enough to transfer loads from weaker piles to stronger piles, the values for ξ_1 and ξ_2 may be divided by 1.1, provided the value of ξ_1, which is applied to the mean pile resistance, is not lower than 1.0.

Clause 7.6.2.2(7)P *Clause 7.6.2.2(10)P* (3) As mentioned above, when several load tests have been performed, the first estimate of an overall $R_{c,k}$ value, based on all the load test results, might lead to different 'homogeneous' parts of the site being identified. In this situation, the procedure is started again from step 1 for each 'homogeneous' part of the site. This can result in less conservative $R_{c,k}$ values than would be obtained if, as in the first estimate, the soil conditions were assumed to be the same over the whole site and the minimum value of $R_{c,m}$ governs the $R_{c,k}$ value over the whole site.

Clause 7.6.2.2(12) *Clause 7.6.2.2(13)* (4) If necessary, $R_{c,k}$ can be split into the characteristic shaft resistance $R_{s,k}$ and the characteristic base resistance $R_{b,k}$. This is possible particularly when measurements to determine the load in the pile have been made along the shaft of the tested piles or when calculations based on the results of ground tests or dynamic tests have been carried out.

Clause 7.6.2.2(14)P (5) The design pile compressive resistance, $R_{c,d}$ is obtained by applying the partial factor γ_t to the total characteristic resistance or the partial factors γ_s and γ_b to the characteristic shaft resistance and characteristic base resistance, respectively, in accordance with the following equations:

$$R_{c,d} = R_{c,k}/\gamma_t \quad (7.4)$$

or

$$R_{c,d} = R_{b,k}/\gamma_b + R_{s,k}/\gamma_s \quad (7.5)$$

$R_{c,d}$ for persistent and transient situations may be obtained from the results of pile load tests using DA-1 and DA-2 and the recommended values for the partial factors γ_t or γ_s and γ_b given in *Tables A.6, A.7* and *A.8*. DA-3 is not applicable in the case of pile load tests because the procedure using the results of load tests involves applying partial factors directly to the characteristic resistances $R_{c,k}$ or $R_{s,k}$ and $R_{b,k}$, derived from load tests, while DA-3 involves applying partial factors to the characteristic values of the ground strength parameters. For accidental situations, unless stated otherwise in the National Annex, it can be assumed that $\gamma_t = \gamma_s = \gamma_b = 1.0$.

Clause 7.6.2.1(3)P *Clausse 7.6.2.1(4)* In the case of pile groups, the compressive resistance of the whole foundation is determined either by summing the compressive resistances of the individual piles or by assuming a block failure, whichever yields the lower value.

Some background information on the recommended values for ξ_1 and ξ_2 given in *Annex A* can be found in Bauduin (2001). These values are based on a reference value of about 10% for the coefficient of variation of the pile compressive resistance: for coefficient of variation values less than 10%, the mean of the measured resistances should govern the design, whereas for coefficient of variation values greater than 10%, the lowest measured resistance should govern.

Example 7.1 below illustrates the calculation of the design compressive resistance of a single pile from the results of static load tests following the procedure described above.

Ultimate compressive resistance from ground tests results

General

As already mentioned, methods for predicting the compressive resistance of piles from ground test results can be used, provided that they have been established from pile load tests and from comparable experience. *Clause 7.6.2.3(1)P*

To account for the additional uncertainty of the calculation method, Eurocode 7 allows a model factor to be introduced in order to ensure that the prediction is safe enough. This model factor is, in fact, a calibration factor for the method. However, no further information is given about it in the code, but it is anticipated that it will play an important role when the existing prediction methods are adapted to the new design procedures, partial factors and coefficients being introduced by the Eurocodes. The value of the model factor should be obtained by comparing static load test results and corresponding predictions. It can be selected with the aim to provide a given reliability to the predictions: for instance, one may wish that, if static load tests were performed, 95% (or some other reliability level) of the measured compressive resistances would be greater than the calculated predictions. The value of the model factor can be obtained by statistical analyses of the data bank of load tests results (e.g. see Bauduin, 2002b; Frank and Kovarik, 2005). *Clause 7.6.2.3(2)*

Design procedures with Design Approaches 1 and 2

As in the design method based on the results of static load tests, the variability of the ground, and hence of the pile resistance over the site considered, should also be taken into account when assessing the characteristic value of the compressive resistance. The following two procedures for accounting for the variability of the ground are introduced in Eurocode 7:

- The first procedure, called the 'model pile' procedure in this guide, is where the values of the ground test results at each individual tested profile are used to calculate the compressive resistance of a model, e.g. fictitious, pile at the same location. The procedure is, in fact, similar to that used with the results of static load tests, e.g. it involves applying ξ factors to the calculated resistance to account for the variability of the pile resistance and obtain the characteristic compressive resistance. *Clause 7.6.2.3(5)P*
- The other procedure, referred to as the 'alternative' procedure, is where the ground test results (shear strength, cone resistance, etc.) of all tested locations are first brought together before evaluating the characteristic values of base resistance and shaft resistance in the various strata based on a cautious assessment of the test results and without applying the ξ factors. *Clause 7.6.2.3(8)*

'Model pile' procedure

The 'model pile' procedure for determining the design compressive resistance $R_{c,d}$ from the results of tests on the ground (these can be either laboratory or *in situ* tests) is based on the results of one or more profiles of such tests. As in the case of pile load tests, Eurocode 7 requires that, when determining $R_{c,d}$ using this semi-empirical method, the interpretation of the results of the ground tests and the calculated resistances take into account the variability of the ground over the site. Careful examination of the calculated pile resistances might lead to different parts of the site being identified, each with different resistances. A clear example of this, involving the use of cone penetrometer test (CPT) results, is given by Bauduin (2002b). *Clause 7.6.2.3(5)P* *Clause 7.6.2.3(6)P*

The steps in the 'model pile' procedure for determining the design compressive resistance of a pile foundation from ground tests results are as follows:

(1) Determine the calculated compressive resistance $R_{c,cal}$ by applying the prediction method to the results of each profile of tests independently in accordance with the following equation:

$$R_{c,cal} = R_{b,cal} + R_{s,cal} \tag{D7.1}$$

where $R_{b,cal}$ and $R_{s,cal}$ are the calculated base resistance and calculated shaft resistance, respectively, determined for the profile of ground tests results under consideration.

They include the model (calibration) factor. The result is the predicted resistance of a pile if it were exactly at the location of the profile of ground tests. Hence this pile can be called a model pile.

Clause 7.6.2.3(5)P (2) The characteristic values $R_{c,k}$, $R_{b,k}$ and $R_{s,k}$ are determined from the following equation:

$$R_{c,k} = (R_{b,k} + R_{s,k}) = (R_{b,cal} + R_{s,cal})/\xi = R_{c,cal}/\xi = \text{Min}\{(R_{c,cal})_{mean}/\xi_3; (R_{c,cal})_{min}/\xi_4\} \quad (7.8)$$

where ξ_3 and ξ_4 are correlation factors that depend on the number of profiles of tests, n, and are applied respectively

– to the mean values

$$(R_{c,cal})_{mean} = (R_{b,cal} + R_{s,cal})_{mean} = (R_{b,cal})_{mean} + (R_{s,cal})_{mean}$$

– and to the lowest values

$$(R_{c,cal})_{min} = (R_{b,cal} + R_{s,cal})_{min}$$

The recommended values for ξ_1 and ξ_2 given in *Annex A* are intended to cover the variability in the ground and the calculated resistances over the site (see above).

Clause 7.6.2.3(7) (3) If the structure connecting the piles is stiff and strong enough to transfer loads from weaker piles to stronger piles, the values for ξ_3 and ξ_4 may be divided by 1.1, provided the value of ξ_3, which is applied to the mean value, is not lower than 1.0.

Clause 7.6.2.3(6)P (4) If several profiles of ground tests are available, the first estimate of an overall $R_{c,k}$ value, based on all the profiles of ground tests, might lead to different 'homogeneous' parts of the site being identified. In this situation, the procedure is started again from step 2 for each 'homogeneous' part of the site. This can result in less conservative $R_{c,k}$ values than would be obtained if, as in the first estimate, the soil conditions were assumed to be the same over the whole site and the minimum value of $R_{c,cal}$ governs the $R_{c,k}$ value over the whole site.

Clause 7.6.2.3(3)P *Clause 7.6.2.3(4)P* (5) The design compressive resistance is obtained by applying the partial factors γ_s and γ_b to the characteristic shaft resistance and to the characteristic base resistance, respectively, in accordance with the following equations:

$$R_{c,d} = R_{b,d} + R_{s,d} \quad (7.6)$$

$$= R_{b,k}/\gamma_b + R_{s,k}/\gamma_s \quad (7.7)$$

This model pile design procedure may be used with DA-1 and DA-2 and the recommended values for the partial factors γ_s and γ_b given in *Annex A* for persistent or transient situations. The model pile procedure is not applicable to DA-3 because, as explained in the case of compressive resistance obtained from pile load tests, the procedure involves applying partial factors to the resistances while DA-3 involves applying partial factors to the characteristic values of the ground strength parameters. For accidental situations, unless otherwise stated in the National Annexes, it can be assumed that $\gamma_s = \gamma_b = 1.0$.

Clause 7.6.2.1(3)P *Clause 7.6.2.1(4)* (6) In the case of groups of piles, the bearing capacity of the whole foundation is determined either by summing up the individual compressive resistances or by assuming a block failure, whichever provides the lower value.

Examples 7.2 and 7.3 demonstrate the calculation of pile compressive resistance from the results of ground tests following the procedure outlined above. Example 7.2 uses the results of pressuremeter tests (PMTs) while Example 7.3 uses undrained shear strength (c_u) measurements.

'Alternative' procedure

Clause 7.6.2.3(8) As an alternative to the 'model pile' procedure, Eurocode 7 allows the characteristic resistance values $R_{b,k}$ and $R_{s,k}$ to be determined directly from the values of ground parameters:

$$R_{b,k} = A_b q_{b,k}$$
$$R_{s,k} = \sum_i A_{s,i} q_{s,k,i} \qquad (7.9)$$

where $q_{b,k}$ and $q_{s,k,i}$ are characteristic values of base resistance and shaft resistance per unit area in the various strata, obtained using an appropriate method and the values of the ground parameters.

The 'alternative' procedure then follows steps 5 and 6 of the 'model pile' procedure. This alternative procedure is intended to allow use of the traditional methods for calculating the compressive resistance from ground test results.

The values of $q_{b,k}$ and $q_{s,k,i}$ (obtained from tabulated or chart values or from correlations) should account for the variability of the ground parameters, the volume of soil involved in the failure mechanism considered, the spatial variability of the pile resistance, the variability due to the effect of pile installation, and the stiffness of the structure. This is because the ξ factors are not used explicitly in this alternative method.

The 'alternative' procedure treats the soil variability differently from the method based on the results of static load tests or from the 'model pile' procedure based on ground test results. As the partial factors γ_b, γ_s and γ_t in *Tables A.6, A.7* and *A.8* are intended to be used in conjunction with the ξ factors, they may not be appropriate for use with the 'alternative' procedure. A model factor may have to be introduced or directly included when determining the values of $q_{b,k}$ and $q_{s,k}$. *Clause 7.6.2.3(8)*

Examples 7.2 and 7.3 demonstrate the use of the 'alternative' procedure.

Design Approach 3

As noted above, since DA-3 uses partial factors applied to the ground parameters, neither the 'model pile' procedure nor the 'alternative' procedure can be used with DA-3 because they both involve factors applied to the resistances. DA-3 is usually intended to be used with calculation models involving the design values of ground parameters obtained from the results of laboratory tests. When using DA-3, *clause 7.6.2.3(9)P* explains that the characteristic values of the ground parameters X_k are first determined in accordance with *clause 2.4.5*, and the design values X_d are then obtained by applying the material factors γ_M (column *M2* of *Table A.4*) in accordance with *equation* (*2.2*): *Clause 7.6.2.3(9)P* *Clause 2.4.5* *Clause 2.4.6.2(1)P*

$$X_d = X_k/\gamma_M \qquad (2.2)$$

For pile design using DA-3, the design value of the compressive resistance $R_{c,d}$ is derived directly by inputting the design values of the ground strength parameters X_d in the calculation model:

$$R_{c,d} = R_{b,d} + R_{s,d} = R_{b,cal}(X_d) + R_{s,cal}(X_d) \qquad (D7.2)$$

Example 7.3 shows the various possibilities for using DA-3 with the results of undrained shear strength (c_u) measurements.

Note that, where relevant in the above procedures, the values of the parameters to be used to assess the shaft resistance should be cautious estimates of their mean values because the length of the pile shaft in a given stratum is usually 'large'. For the base resistance, as the volume involved in the failure mechanism around the base is usually 'small', the values of the parameters to be used should be cautious estimates of their local values around the base level.

Ultimate compressive resistance from dynamic tests results

The general requirements in Eurocode 7 for using dynamic tests to determine the compressive resistance of piles are set out in *clause 7.5.3*. The use of different types of dynamic test results, as well as the use of redriving results, to assess the compressive resistance of individual piles in compression, are mentioned in *clause 7.6.2*. The dynamic tests results are: *Clause 7.5.3*

Clause 7.6.2.4
Clause 7.6.2.4(3)P
Clause 7.6.2.4(2)

- **Dynamic impact (hammer blow) tests**. During this type of test, it is assumed that the strain is high enough to reach the (dynamic) ultimate compressive resistance. The dynamic resistance should be measured. The test can also include a signal-matching procedure leading to an approximate estimate of the shaft and base resistances and of the load–settlement curve.

Clause 7.6.2.5

- **Pile-driving formulae**. The use of pile-driving formulae is the traditional way of taking advantage of the penetration records during the driving of piles to determine the bearing resistance.

Clause 7.6.2.6

- **Wave equation analyses**. Wave equation analyses may be used to assess the design compressive resistance of piles. However, this mathematical model (also called the mass–spring model) is usually employed to study the driving conditions (hammer performance, stresses in the pile).

When determining the compressive resistance of piles from dynamic tests, it is often recommended that the driving records after redriving (by a few centimetres and some time after the end of the initial pile driving) are used.

Clause 7.6.2.4(4)P

The procedure for determining the compressive resistance of a pile from dynamic test results is the same for the three types of test, although some specific requirements need to be met for each type of test. The characteristic value is determined from the following equation:

$$R_{c,k} = \mathrm{Min}\{(R_{c,m})_{mean}/\xi_5;\ (R_{c,m})_{min}/\xi_6\} \qquad (7.11)$$

where $R_{c,m}$ are the static compressive resistances derived from the dynamic measurements, and ξ_5 and ξ_6 are correlation factors related to the number of piles tested, n, and are applied to the mean $(R_{c,m})_{mean}$ and the lowest $(R_{c,m})_{min}$. Recommended values for ξ_5 and ξ_6 are given in *Annex A*. Note that the ξ values are not the same for the three types of dynamic measurements.

The design compressive resistance is then obtained from

$$R_{c,d} = R_{c,k}/\gamma_t \qquad (7.10)$$

where the partial factor on the total resistance γ_t is the same as for the other methods for determining the compressive resistance of pile foundations. For DA-1 and DA-2, the values of γ_t are given in *Annex A*. For accidental situations it can be assumed that $\gamma_t = 1.0$.

Clause 7.6.2.5(3)P

Pile-driving formulae should only be used with the above procedure to assess the design compressive resistance in the case of end-bearing piles in cohesionless soils. For other types of pile and/or other types of soil the uncertainty is larger, and other methods or higher partial factors should be used.

7.6.3. Ground tensile resistance

General requirements

Clause 7.6.3.1(1)P
Clause 7.6.3.1(3)P

Many of the Eurocode 7 requirements for piles in compression also apply to piles in tension. For piles in tension, two ULSs must be checked:

- pull-out failure (tensile resistance) of individual piles
- uplift failure of the block of ground containing the piles.

Clause 7.6.3.1(4)P

As in the case of the compressive resistance failure of piles, the pull-out resistance of individual piles should be checked using the GEO set of partial factors and relevant inequality. However, for groups of piles in tension, possible uplift failure of the block of ground containing the piles should be checked using the UPL set of partial factors and relevant inequality.

Clause 7.6.3.1(8)P

Clause 7.6.3.1(8)*P* draws the designer's attention to the situation where tensile piles interact in a group. Tension on one pile reduces the effective vertical stress close to the surrounding piles, and hence reduces their shaft resistance. This applies to the resistance of the individual piles in the group and consequently to the resistance of the whole foundation.

Tensile resistance of individual piles

The methods for determining the ground resistance of piles in tension, either from static pile load tests or from ground test results, are very similar to those for piles in compression. The main differences are: *Clause 7.6.3.1*

- The base resistance is always neglected.
- The correlation factors ξ should not be divided by 1.1, even in the case of stiff structures. This is due to the fact that ground failure of tensile piles is usually brittle (loss of strength after having reached the peak resistance). Hence, it is unsafe to assume load transfer from failed to not yet failed piles, and therefore this is not allowed.
- The value of the partial factor on the total resistance (i.e. shaft resistance) in tension, $\gamma_{s,t}$, is larger than the value of γ_s in compression (see the tables in *Annex A*). It is common practice to be somewhat more cautious when attributing safety to tensile piles than to compressive piles.

Given these differences, the general design requirements for piles in tension in *clause 7.6.3* are the same as those in *clause 7.6.2* for piles in compression. Also, the correlation factors ξ_1 and ξ_2 (for measured tensile resistances) and ξ_3 and ξ_4 (for calculated tensile resistances) recommended by EN 1997-1-1 have the same values (*Tables A.9* and *A.10*, respectively). When static load tests are used for designing tensile pile foundations, these should, as already noted in Section 7.5 of this guide, be carried to failure. For the design of tensile piles using ground tests results, the model pile procedure may be used, and EN 1997-1-1 also allows the alternative procedure to be used. When using DA-3, partial factors are applied to the characteristic ground parameters to calculate the design tensile resistance. *Clause 7.6.3 Clause 7.6.2 Clause 7.6.3.3(4)P Clause 7.6.3.3(6) Clause 7.6.3.3(7)P*

Clause 7.6.3.1(8)P draws the attention of the designer to the case where tensile piles interact in a group: tension on one pile reduces the effective vertical stress close to the surrounding piles, and hence their shaft resistance. This applies to the resistance of the individual piles in the group, and consequently to the resistance of the whole foundation. *Clause 7.6.3.1(8)P*

The partial factors of *Tables A.6, A.7* and *A.10* are, in principle, valid for quasi-static loads. Another important requirement of EN 1997-1 is that cyclic loadings or reversals of load, which might be very detrimental to tensile resistance of a pile, must be considered. Unfortunately, no precise provision as to how to deal with these loading conditions is given in the code. Unless special calculation rules are applied, the effects of such loadings may either be taken into account by applying a model factor to the calculated results so that they err on the safe side or else, as is common practice, increased partial factors are simply applied to the actions for cyclic or reversed loading conditions. *Clause 7.6.3.1(9)P*

It should be noted that when a large variable tensile load has to be combined with a permanent compressive load of similar magnitude, the design load on the pile can become a tensile load, while the resulting characteristic load remains compressive. The foundation should be designed for this tensile design value of the action.

Block failure of a group of piles

Block failure of a group of piles occurs when all the piles and the soil included between them are lifted up by a tensile force. The tensile force causing this may come from a structure above the water level and the pile group, or from upwards water pressure acting on the pile group and that part of the structure below water level, as shown in *Figs 7.1a* and *7.1b* of EN 1997-1-1.

It should be noted that, both for isolated piles and for group of piles, EN 1997-1-1 recommends that the pull-out mechanism involving a cone of ground surrounding the piles is checked, especially when an enlarged base or rock socket is used. *Clause 7.6.3.1(5)*

Eurocode 7 requires that the design against uplift failure of the block is treated as an uplift (UPL) ULS calculation with the appropriate partial factors (see *Tables A.15* and *A.16* in *Annex A*, as well as Chapter 2 in this guide). Example 7.5 demonstrates the design of a group of piles from an upwards water pressure against uplift in accordance with the requirements of *clause 7.6.3.1*. *Clause 7.6.3.1*

Clause 2.4.7.1(1)P It may also be appropriate to check the GEO ULS of groups of piles subjected to a tensile force, in particular when the tensile force comes from the structure.

7.6.4. Vertical displacements of pile foundations

The design of foundations should be such that the movements are limited and do not lead to the occurrence of limit states (serviceability or ultimate) in the supported structure. This general principle is clearly recognized in EN 1997-1-1, in particular in *clauses 2.4.8* and *2.4.9*. The values of the allowable movements should be selected during the design. Some indicative limiting values of structural deformation are given in *Annex H* (informative).

Clause 2.4.8
Clause 2.4.9
Clause 2.4.9(3)P

Clause 7.6.4.1(1)P According to EN 1997-1, it is necessary to assess the settlements of axially loaded pile foundations, such as those of shallow foundations, in order to ensure that the occurrence of an SLS in the structure is sufficiently unlikely. Nevertheless, it is understood that most of the time this assessment can only provide an estimate of the settlements because of all the uncertainties in the models for pile settlements. EN 1997-1 allows settlement calculations to be replaced, in many circumstances, by a simplified design approach involving bearing resistance calculations with partial factors high enough such that a sufficiently low fraction of the ground strength is mobilized and no unacceptable deformation occurs in the supported structure, at least when common piles are used in known ground conditions and successful previous experience is available. This simplified design approach is common practice in traditional design (see also Chapter 6 of this guide).

Clause 7.6.4.1(2)
Clause 2.4.8(4)

Methods for calculating the displacement of pile foundations include the linear elastic approach of Poulos and Davis (1980), as well as elasto-plastic finite-element calculations and *t–z* load transfer functions (curves of mobilization of shaft resistance, e.g. see Baguelin *et al.*, 1982).

7.7. Transversely loaded piles

Clause 7.4 The design of transversely loaded piles must be consistent with the general requirements for the design and load testing of piles given in *clauses 7.4* and *7.5*. In addition, the following requirements apply:

Clause 7.5

Clause 7.7.1(3)
- the transverse resistance should be checked for situations involving rotational or translational failure in the ground in the case of short rigid piles, and for bending failure of the pile together with yield of the soil near the surface in the case of long slender piles

Clause 7.7.1(4)P
- the group effect must be taken into account

Clause 7.7.2
- the transverse load resistance should be determined by means of static load tests or on the basis of ground test results and pile strength parameters

Clause 7.7.3
- the strength of the pile to resist structural failure should be checked
- the transverse displacement should be assessed.

Clause 7.7.2(3)P Other requirements specifically for transversely loaded piles, which also should be accounted for, concern the variability of the ground near the surface as well as the head fixity conditions at the connection between the piles and the structure.

Clause 7.7.2(4)
Clause 7.7.3(4)P

Clause 7.7.3(3) The theory of a beam supported by elastic springs, characterized by the horizontal modulus of subgrade reaction, is explicitly mentioned in EN 1997-1 as an acceptable calculation method for the design of a long slender piles subjected to a transverse load at the top.

7.8. Structural design of piles

The structural design of piles is an important aspect, which forms an integral part of the design of pile foundations. However, most structural designs involve applying code requirements relating to the behaviour of concrete, steel or wood. EN 1997-1 requires that piles are checked against structural failure in all relevant design situations, in accordance

Clause 7.8(1)P
Clause 7.8(2)P

with the requirements of the relevant material Eurocodes, in particular EN 1992, EN 1993 and EN 1995.

Slender piles passing through water or through a thick layer of very weak soil must be checked against buckling. This check against buckling can be omitted if the undrained shear strength c_u is greater than 10 kPa. *Clause 7.8(4)P* *Clause 7.8(5)*

For persistent or transient situations, the design values of actions for the ULS structural design of piles are determined using DA-1, DA-2 or DA-3, depending on the national choice. When DA-1 is used, Combination 1 usually governs the structural design of piles.

7.9. Supervision of construction

The way piles are installed not only influences the design but also plays a fundamental role in ensuring an adequate behaviour of the supported structure. EN 1997-1 requires that a detailed plan of the pile installation is prepared as a basis for the piling works and that the installation of all the piles is monitored and recorded. If there is doubt about the quality of installed piles, relevant measures must be taken, including full-scale tests, the installation of new piles, redriving, etc. *Clause 7.9(1)P* *Clause 7.9(2)* *Clause 7.9(3)P* *Clause 7.9(6)P*

Many aspects of pile design are often linked to the pile installation method. Hence EN 1997-1 repeats some requirements included in the relevant execution standards issued by CEN/TC 288. *Clause 7.9(4)*

When relevant, the integrity of piles must be checked. Dynamic low-strain tests are not always suitable for this purpose, and hence other tests, such as sonic and vibration tests, or coring, may be needed. *Clause 7.9(7)P* *Clause 7.9(8)*

Example 7.1: design of a pile in compression from static load test results

The deep foundations of a major bridge in Europe have been designed by interpreting the results of full-scale pile tests under both axial and transverse loadings (see Wastiaux *et al.*, 1998). The present example, inspired by this project, deals only with the axial compressive resistance of the piles, and aims to show how the results of static compression load tests should be interpreted following Eurocode 7.

The foundations on open-ended driven piles have to be designed in order to carry vertical compressive loads. In the following design calculations, only ULSs in persistent and transient situations and accidental situations are considered. The permanent vertical compressive load is 31 MN, and the vertical accidental load is 16 MN. The purpose of the design is to determine the number of driven piles of length 55.5 m required to carry this load.

It is assumed that there is no need to take into account any group effect for the pile foundation. The full design of the foundation would also require the SLSs to be checked, e.g. a check that the settlement of the foundation is acceptable.

A typical soil profile consists of 20–30 m of very soft clay (mud), muddy sands, sands and clays, and, finally, sands and gravels at the level of the expected location of the base of the piles.

The results of four static load tests on driven piles with different lengths of embedment are available (Fig. 7.1). In what follows, the resistance R_m of a pile of length $L = 55.5$ m is deduced from the resistances measured in the static tests, taking into account the differences in pile length (and after subtracting the positive shaft resistance in the layers which will be submitted to downdrag). Hence, the estimated values of the resistances for a pile of length $L = 55.5$ m, are the following:

- from pile test P8: $R_m = 14.0$ MN
- from pile test P31: $R_m = 14.4$ MN
- from pile test P79: $R_m = 12.1$ MN
- from pile test P79b: $R_m = 13.9$ MN.

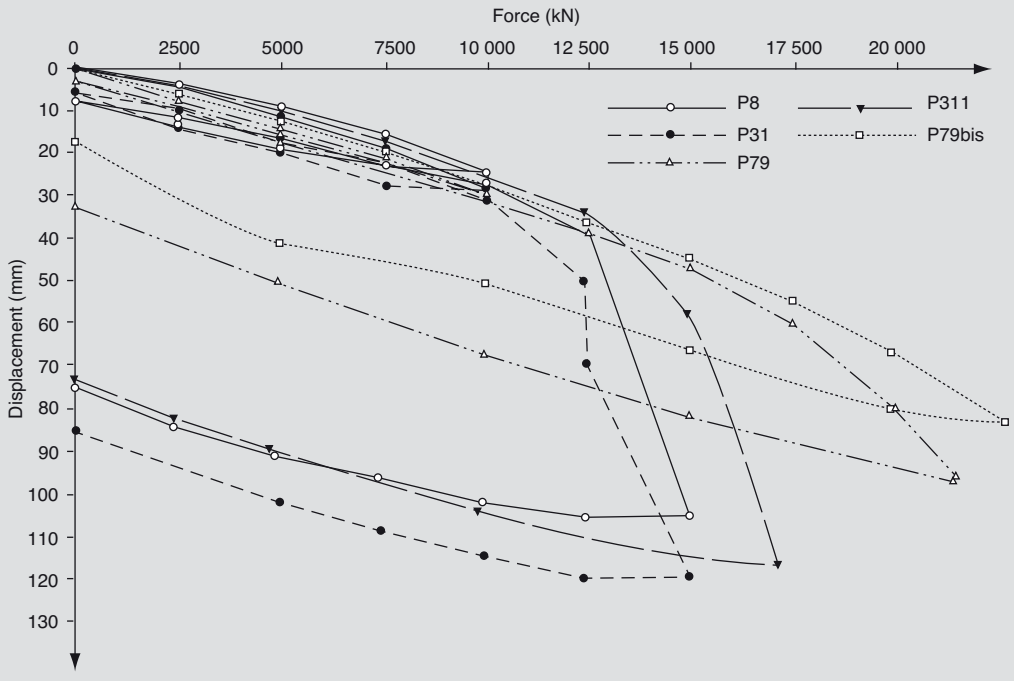

Fig. 7.1. Results of static load tests on driven piles of diameter B = 1220 mm and of different lengths of embedment (Wastiaux *et al.*, 1998)

Clause 7.6.2.2(8)P According to EN 1997-1, the characteristic value of the axial pile resistance, R_k, is determined from the corresponding mean and minimum measured values ($R_{m,\,mean}$, $R_{m,\,min}$) using the following formula:

$$R_k = \text{Min}\{R_{m,\,mean}/\xi_1;\ R_{m,\,min}/\xi_2\} \qquad (7.2)$$

The correlation factors (ξ_1, ξ_2) depend on the number n of static pile load tests. For n = 4, *Table A.9* recommends ξ_1 = **1.10** and ξ_2 = **1.00**. It is assumed that redistribution between weak and strong piles cannot be accounted for because the expected number of piles is too small. Thus, the reduction factor **1.1** on ξ_1 and ξ_2 proposed in *clause 7.6.2.2(9)* is not applied.

Clause 7.6.2.2(9)

$$R_{m,\,mean} = 13.6 \text{ MN}$$

$$R_{m,\,min} = 12.1 \text{ MN}$$

Thus,

$$R_k = \text{Min}\{13.6/\mathbf{1.10};\ 12.1/\mathbf{1.00}\} = \text{Min}(12.4,\ 12.1) = 12.1 \text{ MN}$$

which shows that the minimum measured pile resistance governs the design.

For a single pier of the bridge, the characteristic values of the vertical loads, taking into account the downdrag, are assumed to be:

- for persistent and transient situations: permanent loads G_k = 31 MN (the variable loads are considered to be negligible for the critical piers)
- for accidental situations: permanent and accidental loads $G_k + A_k$ = 47 MN (the accidental load is 16 kN).

Clause 7.6.2.2(14)P For persistent and transient situations, DA-1 (Combinations 1 and 2) and DA-2 are considered. The load tests yield directly the total (or shaft and base) characteristic resistances, and the design values are obtained by applying the resistance factors γ_t (or γ_s

and γ_b). DA-3 is not intended to be used with pile load test results, as it is a 'material' factor approach involving the use of ground strength parameters.

Design Approach 1

DA-1 Combination 1 involves applying the partial factors from sets *A1* and *R1* of *Annex A*. This leads to the following design actions and design resistances: *Clause 2.4.7.3.4.2(2)P*

$$F_{c,d} = \mathbf{1.35}G_k = \mathbf{1.35} \times 31 = 41.85 \text{ MN}$$

$$R_{c,d} = R_{c,k}/\gamma_t = 12.1/\mathbf{1.0} = 12.1 \text{ MN}$$

Thus, the number of piles needed is 41.85/12.1 = 4.

DA-1 Combination 2 involves applying the partial factors of sets *A2* and *R4* of *Annex A*. This leads to the following design actions and design resistances: *Clause 2.4.7.3.4.2(2)P*

$$F_{c,d} = \mathbf{1.0}G_k = \mathbf{1.0} \times 31 = 31 \text{ MN}$$

$$R_{c,d} = R_{c,k}/\gamma_t = 12.1/\mathbf{1.3} = 9.3 \text{ MN}$$

Thus, the number of piles needed is 31/9.3 = 4.

The requirement for DA-1 is that the more conservative result of the two combinations should be used. The number of piles being the same, there is no difference in this example between the two methods for the design number of piles.

It should be noted that, in this Design Approach, Combination 1 provides an overall factor of safety (OFS) on the characteristic resistance of at least

$$\gamma_F\gamma_t = \mathbf{1.35} \times \mathbf{1.0} = 1.35$$

whereas Combination 2 provides an OFS of at least

$$\gamma_F\gamma_t = \mathbf{1.0} \times \mathbf{1.3} = 1.3$$

In relation to the measured mean pile resistance, i.e. including $\xi = \mathbf{1.10}$, these figures become OFS = 1.49 and 1.43, respectively.

Design Approach 2

For DA-2, sets *A1* and *R2* of *Annex A* must be applied. Thus the design actions and design resistances are *Clause 2.4.7.3.4.3(1)P*

$$F_{c,d} = \mathbf{1.35}G_k = 41.85 \text{ MN}$$

$$R_{c,d} = R_{c,k}/\gamma_t = 12.1/\mathbf{1.1} = 11.0 \text{ MN}$$

Thus, the number of piles needed is 41.85/11.0 = 4.

Note that DA-2 provides an OFS on the characteristic resistance of at least

$$\gamma_F\gamma_t = \mathbf{1.35} \times \mathbf{1.1} = 1.5$$

and an OFS of at least 1.65 on the measured mean pile resistance.

Accidental situation

For an accidental situation, all the partial factors on loads should be taken equal to **1.0**. It is assumed that a resistance factor equal to **1.0** is also relevant for the circumstances in this particular accidental situation. Thus, the design actions and design resistances are *Clause 2.4.7.1(3)*

$$F_{c,d} = \mathbf{1.0}G_k + \mathbf{1.0}A_k = 47 \text{ MN}$$

$$R_{c,d} = R_{c,k}/\gamma_t = 18.1/\mathbf{1.0} = 12.1 \text{ MN}$$

The number of piles needed is thus 47/12.1 = 4.

In conclusion, for the given loads, the ULS designs of the piles for the bridge pier for persistent and accidental situations, both require four piles of length $L = 55.5$ m.

Example 7.2: design of a pile in compression from *in situ* test results

A foundation on driven piles in a slightly overconsolidated clay has to be designed to carry permanent and variable vertical compressive loads. The characteristic values of the loads are permanent load $G_k = 3900$ kN and variable load $Q_k = 800$ kN.

Clause 7.6.2.3(6)P The results of three PMT profiles are available (P1, P2 and P3), and the area can be considered as 'homogeneous' (there is only a random variation in the ground test results). The diameter of the piles is $B = 400$ mm, and the expected embedment is $L = 13$ m.

In the following design calculation, only ULSs for persistent and transient situations are considered. It is also assumed that there is no need to take into account any group effect in the design of the pile foundation. The full design of the foundation would also require checking of:

- accidental situations, if relevant
- SLSs, e.g. checking that the settlement of the foundation is acceptable.

Only DA-1 (Combinations 1 and 2) and DA-2 are considered. DA-3 is not intended, in principle, to be used with *in situ* test results. DA-3 uses material factoring, and is only meant to be used with laboratory test results and ground strength parameters.

Note that the sets of calculations for DA-1 and DA-2 would be exactly the same if CPT results were to be used with the 'model pile' procedure.

Clause 7.6.2.3(2) The PMT calculation rules given in Annex D.3 of EN 1997-2 are used, and a model (calibration) factor γ_{RD} equal to **1.05** is applied. This value has been selected for use with the recommended values of the partial factors given in *Annex A* for DA-2, in order to yield the same value of the overall factor of safety as in the present French code of practice with PMT calculation rules (see Frank, 1999). For the sake of comparison, γ_{RD} = **1.05** is also used below for DA-1.

From the three profiles of limit pressures p_l, the mean net limit pressure values determined at the base, $p_{l,\,base}$, and the net limit pressure values determined along the shaft, $p_{l,\,shaft}$, are given in Table 7.2.

Clause 7.6.2.3(3)P The calculated design ultimate compressive resistance of the foundation is obtained from

$$R_{c,\,d} = R_{b,\,d} + R_{s,\,d} \qquad (7.6)$$

where $R_{b,\,d}$ is the design calculated pile base resistance obtained from $R_{s,\,d} = R_{s,\,k}/\gamma_s$, and $R_{s,\,d}$ is the design calculated shaft resistance obtained from $R_{b,\,d} = R_{b,\,k}/\gamma_b$.

'Model pile' procedure

Clause 7.6.2.3(5)P For DA-1 and DA-2, according to EN 1997-1, the characteristic value of the compressive resistance $R_{c,\,k}$ of a pile is determined from the corresponding mean and minimum calculated values ($R_{cal,\,mean}$, $R_{cal,\,min}$) using the following formula:

$$R_{c,\,k} = \mathrm{Min}\{R_{cal,\,mean}/\xi_3;\ R_{cal,\,min}/\xi_4\} \qquad (7.8)$$

The correlation factors (ξ_3, ξ_4) depend on the number n of ground profiles investigated, and $R_{cal,\,mean}$ and $R_{cal,\,min}$ are obtained by calculating the pile compressive resistance for each profile ('model pile' procedure).

In the following, pressuremeter test results are used. All the calculation steps would be exactly the same if CPT results were to be used with the 'model pile' procedure, instead of pressuremeter test results.

For the pressuremeter, the following design criteria are obtained (see EN 1997-2):

- the soil falls into the 'Clay A' category
- the bearing (base) resistance factor is $k = 1.4$
- for the shaft resistance, design curve 1 is used.

Table 7.2. Net limit pressures determined on the pile

	Pressuremeter test profiles			
	P1	P2	P3	Mean (of all values)
$p_{l,\,base}$ (MPa)	0.98	0.78	0.81	0.86
$p_{l,\,shaft}$ (MPa)	0.77	0.73	0.78	0.76

Table 7.3. Values of predicted resistances by the PMT method and calculated pile resistances

PMT profile	R_b (kN)	R_s (kN)	$R_b + R_s$ (kN)	$R_{c,\,cal} = (R_b + R_s)/\gamma_{RD}$ (kN)
1	172	498	670	638
2	137	482	619	590
3	143	503	646	615
				Minimum 590
				Mean 614

Table 7.3 gives the predicted values of the base and shaft resistances based on the three PMT profiles, as well as the calculated compressive resistance $R_{c,\,cal}$, taking into account the model factor $\gamma_{RD} = \mathbf{1.05}$.

In the present example, from *Table A.10*, $n = 3$, thus $\xi_3 = \mathbf{1.33}$ and $\xi_4 = \mathbf{1.23}$. If it is assumed that the structure is stiff and strong enough to transfer loads from weak to strong piles, these values may be divided by **1.1**. Thus, the values used are $\xi_3 = \mathbf{1.33}/\mathbf{1.1} = 1.21$ and $\xi_4 = \mathbf{1.23}/\mathbf{1.1} = 1.12$, and hence the characteristic pile resistance is *Clause 7.6.2.3(7)*

$$R_k = \text{Min}\{614/\mathbf{1.21};\ 590/\mathbf{1.12}\} = \text{Min}(507;\ 527) = 507 \text{ kN}$$

which shows that the mean value governs (this is for ground where the standard deviation of the resistance is less than 10%, and hence is consistent with considering the area as 'homogeneous').

In this example, as the mean resistance governs the design, applying $\xi_3 = \mathbf{1.21}$ to the mean calculated shaft and base resistances leads to their characteristic values:

$$R_{b,\,k} = (172/\mathbf{1.05} + 137/\mathbf{1.05} + 143/\mathbf{1.05})/(3 \times \mathbf{1.21}) = 143/\mathbf{1.21} = 118 \text{ kN}$$

$$R_{s,\,k} = (498/\mathbf{1.05} + 482/\mathbf{1.05} + 503/\mathbf{1.05})/(3 \times \mathbf{1.21}) = 471/\mathbf{1.21} = 389 \text{ kN}$$

$$R_{c,\,k} = 118 + 389 = 507 \text{ kN}$$

Design Approach 1

For DA-1, it is usually logical to apply first the factors corresponding to Combination 2, as this combination usually determines the geotechnical sizing, and then to check that the sizing is adequate with Combination 1, which controls the design with regard to structural safety.

Combination 2 involves applying the partial factors of sets *A2* and *R4* of *Annex A*. This leads to the following design actions and design resistances: *Clause 2.4.7.3.4.2(2)P*

$$F_{c,\,d} = \mathbf{1.0}G_k + \mathbf{1.3}Q_k = \mathbf{1.0} \times 3900 + \mathbf{1.3} \times 800 = 4940 \text{ kN}$$

$$R_{c,\,d} = R_{b,\,k}/\gamma_b + R_{s,\,k}/\gamma_s = 118/\mathbf{1.3} + 389/\mathbf{1.3} = 390 \text{ kN}$$

Thus, the number of piles needed is 4940/390 = 12.7, which is rounded up to 13 piles. The equivalent overall factor of safety, OFS, can be considered as the total predicted mean resistance of the foundation ($R_b + R_s$), i.e.

$$13 \times (670 + 619 + 646)/3 = 13 \times 645 \text{ kN}$$

from Table 7.3, divided by the total applied characteristic load, i.e. 3800 kN + 800 kN, which gives

$$\text{OFS} = 13 \times 645/4700 = 1.78$$

Clause 2.4.7.3.4.2(2)P

Combination 1 involves applying the partial factors of sets *A1* and *R1* of *Annex A*. This leads to the following design actions and design resistances:

$$F_{c,d} = \mathbf{1.35}G_k + \mathbf{1.5}Q_k = \mathbf{1.35} \times 3900 + \mathbf{1.5} \times 800 = 6465 \text{ kN}$$

$$R_{c,d} = R_{b,k}/\gamma_b + R_{s,k}/\gamma_s = 118/\mathbf{1.0} + 389/\mathbf{1.0} = 507 \text{ kN}$$

Thus, the number of piles needed is 6465/507 = 12.8, which also rounds up to 13 piles, and, as for Combination 2, the OFS = 1.78.

The requirement for DA-1 is that the more conservative result of the two combinations should be used. In this example, Combination 1 is marginally more conservative than Combination 2, but as the number of piles is the same for both combinations, there is no difference for the final foundation design using the two combinations.

Design Approach 2

Clause 2.4.7.3.4.3(1)P

For DA-2, sets *A1* and *R2* of *Annex A* are applied. Thus, the design actions and design resistances are

$$F_{c,d} = \mathbf{1.35}G_k + \mathbf{1.5}Q_k = \mathbf{1.35} \times 3900 + \mathbf{1.5} \times 800 = 6465 \text{ kN}$$

$$R_{c,d} = R_{b,k}/\gamma_b + R_{s,k}/\gamma_s = 118/\mathbf{1.1} + 389/\mathbf{1.1} = 461 \text{ kN}$$

Thus, the number of piles needed is 6465/461 = 14. The equivalent overall factor of safety can be considered as the total calculated mean resistance of the foundation, i.e. 14 × 645, divided by the total applied characteristic load, i.e. 3800 kN + 800 kN, which gives

$$\text{OFS} = 14 \times 645/4700 = 1.92$$

'Alternative' procedure

Clause 7.6.2.3(8)

For DA-1 (Combinations 1 and 2) and DA-2, *clause 7.6.2.3*(*8*) allows $R_{b,k}$ and $R_{s,k}$ to be determined directly from the ground parameter values. It is assumed that the same calculation rules are used as for the 'model pile' procedure. They can be applied in two ways: with either the characteristic or mean values of the ground parameters.

Using the mean p_l values along the shaft and at the base of the piles to predict the shaft and base resistances given in Table 7.2, which corresponds to more to traditional practice, one finds

$$R_{mean} = (R_{s,k} + R_{b,k})/\gamma_{RD} = (495 + 151)/\mathbf{1.05} = 615 \text{ kN}$$

This value is 615/507 = 1.21 times larger than the characteristic value for the 'model pile' procedure (it corresponds to the value of ξ_3). This shows that if the same values for the partial factors on loads and base and shaft resistances are to be used in DA-1 (Combinations 1 and 2) and DA-2 when the alternative procedure is applied, the values of the partial factors in *Annex A* may need to be corrected by a model factor greater than **1.0** (see the note in *Clause 7.6.2.3*(*8*)). The results of the alternative procedure, as compared with the 'model pile' procedure, will then be directly linked to the choice of this model factor.

Clause 7.6.2.3(8)

Table 7.4 summarizes the values of R_k and R_d obtained in the various Design Approaches and procedures.

Table 7.4. Values of R_k (or R_{mean}) and R_d (in kN)

	Model pile procedure			Alternative procedure
	DA-1			
	Combination 2	Combination 1	DA-2	DA-1, DA-2
R_k (kN)	507	507	507	R_{mean}: 615
R_d (kN)	390	507	461	[a]

[a] Depends on the Design Approach used and the value of the supplementary model factor introduced

Example 7.3: design of a pile in compression from laboratory test results

This example presents the ULS design of a single bored pile in clay (pile diameter $B = 0.80$ m using the undrained shear strength c_u to avoid bearing resistance failure for a persistent or transient design situation. The characteristic values of the loads are permanent load $G_k = 600$ kN and one single variable load $Q_k = 300$ kN. The design aims to check the required length (L) of the pile, which is expected to be 18.5 m.

The ground was investigated by boreholes and tests in three profiles ($n = 3$: BH1, BH2 and BH3). Figure 7.2 shows the three profiles of undrained shear strength c_u measured on samples recovered from the boreholes.

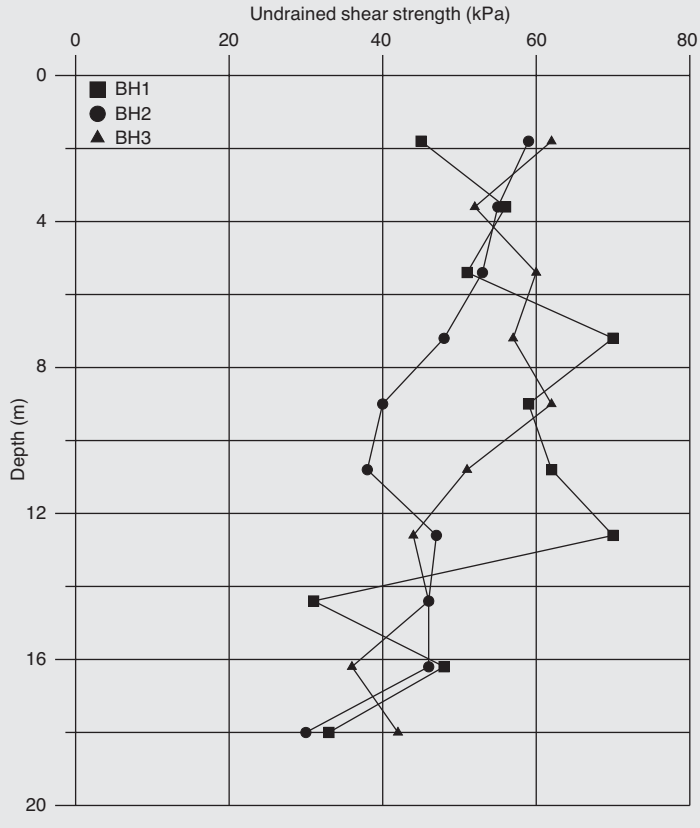

Fig. 7.2. Undrained shear strength c_u profiles for boreholes BH1, BH2 and BH3

Table 7.5. Determination of characteristic values of $c_{u,\,shaft}$ and $c_{u,\,base}$

	Mean c_u values			Mean of all values	Characteristic value of all values
	BH1	BH2	BH3		
$c_{u,\,shaft}$ (kPa)	52	46	51	50	47
$c_{u,\,base}$ (kPa)	33	30	42	35	32

The corresponding mean values of the undrained shear of the clay c_u along the shaft of the pile ($c_{u,\,shaft}$) and in the vicinity of pile base at a depth of 18.5 m ($c_{u,\,base}$) are given in Table 7.5. The characteristic values have been determined using the method given in Chapter 2 of this guide.

The axial bearing resistance of the pile is calculated by the formula

$$R = R_s + R_b$$

where

$$R_s = \pi BL\alpha c_u$$

is the shaft resistance ($\alpha = 0.75$ in this case) and

$$R_b = (\pi B^2/4)9c_u$$

is the pile base resistance, and it is assumed that there is no need for a model factor (i.e. the model factor is taken equal to **1.0**). The shaft resistance is governed by the mean values of the undrained shear resistance over the length of the shaft, while the base resistance is governed by the local mean values close to the pile base.

The calculations are performed according to the 'model pile' and 'alternative' procedures for DA-1 and DA-2, as well as for DA-3. The structure is considered not to have sufficient strength and stiffness to allow redistribution of loads.

'Model pile' procedure

Clause 7.6.2.3(5)P For DA-1 and DA-2, according to EN 1997-1, the characteristic axial resistance, R_k, of a pile is calculated from the corresponding mean and minimum values (R_{mean}, R_{min}) by the formula (called the 'model pile' procedure)

$$R_k = \mathrm{Min}\{R_{mean}/\xi_3;\ R_{min}/\xi_4\}$$

The correlation factors (ξ_3, ξ_4) depend on the number n of ground profiles investigated; for $n = 3$, $\xi_3 = \mathbf{1.33}$ and $\xi_4 = \mathbf{1.23}$ (see *Table A.10*).

R_{mean} and R_{min} are obtained by calculating the compressive resistance, R_c, for each borehole using the mean c_u values (c_u in kilopascals and resistances in kilonewtons):

$$\begin{aligned} R_c &= R_s + R_b = \pi BL\alpha c_{u,\,shaft} + (\pi B^2/4)9c_{u,\,base} \\ &= 34.9c_{u,\,shaft} + 4.5c_{u,\,base} \end{aligned}$$

Thus,

$$R(\mathrm{BH1}) = 1815 + 148 = 1963\ \mathrm{kN}$$

$$R(\mathrm{BH2}) = 1605 + 135 = 1740\ \mathrm{kN}$$

$$R(\mathrm{BH3}) = 1780 + 189 = 1969\ \mathrm{kN}$$

Hence

$$R_{mean} = (1963 + 1740 + 1969)/3 = 1891\ \mathrm{kN}$$

$$R_{min} = 1740\ \mathrm{kN}$$

and

R_k = Min{1891/**1.33**; 1740/**1.23**}
= Min{1422 kN; 1415 kN} = 1415 kN

The minimum value governs the resistance, indicating a variability greater than 10% of the undrained shear strength over the site and hence of the resulting pile resistance. Hence, using the minimum mean c_u values obtained from the BH2 profile, one can now deduce the characteristic base and shaft resistances:

$R_{s,k}$ = 1605/**1.23** = 1305 kN

$R_{b,k}$ = 135/**1.23** = 110 kN

A careful examination of the ground investigation results does not enable different 'homogeneous' areas to be distinguished. These characteristic values are thus adopted for the entire site.

Design Approach 1

For DA-1, it is normally logical to apply first the factors corresponding to Combination 2, as this combination usually determines the geotechnical sizing, and then to check if the sizing is adequate with Combination 1, which is the relevant combination for determining the structural sizing.

Combination 2 consists of applying the partial factors of sets *A2* and *R4* of *Annex A*. This results in the following design actions and resistances: *Clause 2.4.7.3.4.2(2)P*

$F_{c,d}$ = **1.0**G_k + **1.3**Q_k = **1.0** × 600 + **1.3** × 300 = 990 kN

$R_{c,d} = R_{b,k}/\gamma_b + R_{s,k}/\gamma_s$ = 1305/**1.3** + 110/**1.6** = 1073 kN

If the 'degree of optimization' is defined as DO = $(R_{c,d}/F_{c,d})$ – 1 expressed as a percentage, then in the present case DO = 8%.

Combination 1 consists of applying the partial factors of sets *A1* and *R1* of *Annex A*. This results in the following design actions and resistances: *Clause 2.4.7.3.4.2(2)P*

$F_{c,d}$ = **1.35**G_k + **1.5**Q_k = **1.35** × 600 + **1.5** × 300 = 1260 kN

$R_{c,d} = R_{b,k}/\gamma_b + R_{s,k}/\gamma_s$ = 1305/**1.0** + 110/**1.25** = 1393 kN

Hence, DO = 11%.

The requirement for DA-1 is that the more conservative result of the two combinations should be used. In the present case, there is sufficient length (18.5 m) to fulfil both conditions. The conclusion is that the piles can be slightly shortened.

Design Approach 2

For DA-2, sets *A1* and *R2* of *Annex A* must be applied. Thus *Clause 2.4.7.3.4.3(1)P*

$F_{c,d}$ = **1.35**G_k + **1.5**Q_k = **1.35** × 600 + **1.5** × 300 = 1260 kN

$R_{c,d} = R_{b,k}/\gamma_b + R_{s,k}/\gamma_s$ = 1305/**1.1** + 110/**1.1** = 1286 kN

DO = 2%, which shows that the length of the pile (L = 18.5 m) is optimum with regard to DA-2.

Alternative procedure

Design Approaches 1 and 2

For DA-1 (Combinations 1 and 2) and DA-2, *clause 7.6.2.3*(*8*) allows $R_{b,k}$ and $R_{s,k}$ to be determined directly from the ground test results using the alternative procedure. It is assumed that the same calculation rules are used as for the 'model pile' procedure. In the *Clause 7.6.2.3(8)*

case where ground strength parameters are used as inputs, it seems in the logic of Eurocode 7 that the alternative method should be used with their characteristic values. Taking the characteristic values of c_u from Table 7.5 results in the characteristic resistance being calculated as

$$R_k = R_{s,k} + R_{b,k} = 34.9c_{u,shaft,k} + 4.5c_{u,base,k} = 1640 + 144 = 1784 \text{ kN}$$

This value is 26% greater than the value of 1415 kN obtained by applying the ξ correlation factors as in the case of the 'model pile' procedure, and, thus, the following 'degrees of overestimation' are obtained:

- for DA-1 (Combination 2)

  DO = 1.26 × 1.08 – 1 = 36%

- for DA-2

  DO = 1.26 × 1.02 – 1 = 29%

This arises directly from the fact that the characteristic values of c_u are very near the ones governing in the 'model pile' procedure (i.e. the minimum ones given by BH2) and that no correlation factor ξ is applied here.

Design Approach 3

For DA-3, sets *A1* and *M2* (material factors) of *Annex A* must be applied (with resistance factors γ_R = **1.0**), thus

$$F_{c,d} = \mathbf{1.35}G_k + \mathbf{1.5}Q_k = \mathbf{1.35} \times 600 + \mathbf{1.5} \times 300 = 1260 \text{ kN}$$

The design resistance is calculated directly from the design values of the undrained shear strength, which are derived from their characteristic values:

- for the pile shaft

  $c_{u,shaft,d} = c_{u,shaft,k}/\gamma_{cu} = 47/\mathbf{1.40} = 33.6$ kPa

- for the pile base

  $c_{u,base,d} = c_{u,base,k}/\gamma_{cu} = 32/\mathbf{1.40} = 22.9$ kPa

and

$$R_{c,d} = 34.9c_{u,shaft,d} + 4.5c_{u,base,d} = 1640 + 144 = 1276 \text{ kN}$$

DO = 1%, which shows that the length of the pile (D = 18.5 m) in this particular example is optimal with regard to DA-3.

Conclusion

If the alternative method is excluded, the three Eurocode Design Approaches give similar results. DA-1 is the least conservative, DA-3 is the most conservative, while DA-2 gives an intermediate value (very near to that of DA-1). In the present example, the maximum deviation between the three Design Approaches is very small in view of the usual uncertainties in the calculation models and in the estimation of the soil material properties. It is pointed out that the above conclusion is not universal; other combinations of loads and material properties may result in different levels of conservatism for each approach.

The design of a pile may also have to include ULS calculations to check ULS accidental and seismic situations as well as calculations to check SLS situations, i.e. to check that the settlement of the pile is acceptable under the common working load combinations. The SLS design calculations may demonstrate that a further increase of the pile length is required if the settlement tolerances are very small.

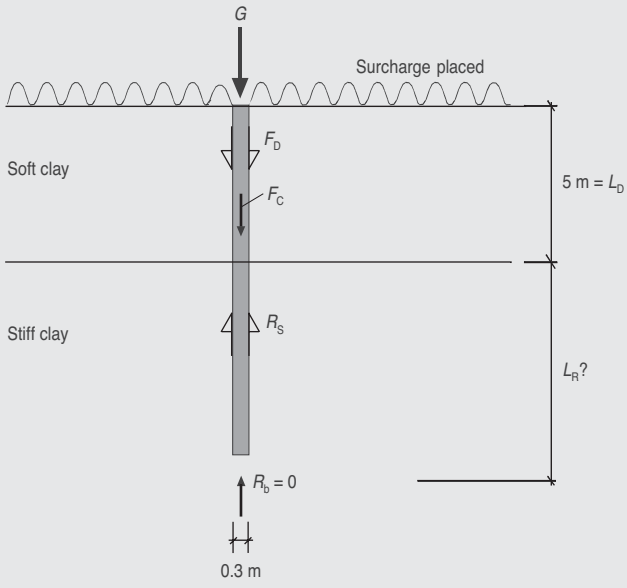

Fig. 7.3. Pile subjected to downdrag (Simpson and Driscoll, 1998)

Example 7.4: design of a pile subject to downdrag

This example involves a bored pile of diameter B = 300 mm, embedded in a stiff clay overlain by 5 m of soft clay as shown in Fig. 7.3.

A surcharge is placed at ground level, causing settlement of the soft clay and downdrag (negative skin friction) on the pile. The pile is also subjected to a permanent vertical load with a characteristic value G_k = 300 kN.

In the following, the required embedment L_R of the pile in the stiff clay is calculated for ULSs in persistent situations, using the three Design Approaches (DA-1, DA-2 and DA-3).

The checks of SLSs would require prediction of the settlements under the characteristic values of the actions together with the characteristic values of the ground deformation parameters.

According to *clause 7.3.2.1(3)P*, the designer is free to choose either the ground settlement or the downdrag (negative friction) load as the action. Taking the ground settlement as the action is generally carried out using a full ground–pile interaction analysis. It can be performed using the well-known '*t–z* curve' approach, where '*t*' is the mobilized shaft friction and '*z*' is the corresponding relative pile–ground displacement $\Delta s = s - s_g$ (where s is the settlement of the pile and s_g is the 'free' ground settlement). The ground settlement s_g can be taken as a function of depth, and the analysis enables, in particular, the neutral point where $\Delta s = 0$ to be determined. Below the neutral point the pile settles more than the ground, so that the ground provides resistance to rather than loads the pile, i.e. the skin friction becomes positive. This analysis is more complicated than the approach which consists of estimating a maximum (limiting) downdrag load along the entire length of the pile in the settling layer. The interaction analysis may be used to demonstrate that the actual downdrag load is less than the limiting value (either because the downdrag is not fully mobilized and/or because the neutral point is located somewhat above the bottom of the layer).

Clause 7.3.2.1(3)P

Clause 7.3.2.2(1)P

In this example, the main goal is to show how the three Design Approaches are applied and, for simplicity, how the maximum downdrag load approach is used.

Clause 2.4.7.3.4

Table 7.6. Recommended values of partial factors to apply when designing for downdrag (negative skin friction) treated as an action (effective stress analysis)

Design Approach	Permanent structural action, γ_G	Downdrag (negative skin friction)		Compressive resistance (positive friction), γ_s (or γ_φ)
		Shear strength parameter, γ_φ	Load, γ_G	
DA-1				
Combination 1	Set *A1*: 1.35	Set *M1*: 1.0	Set *A1*: 1.35	Set *R1*: 1.0
Combination 2	Set *A2*: 1.00	Set *M2*: 1.25[a]	Set *A2*: 1.00	Set *R4*: 1.3
DA-2	Set *A1*: 1.35	Set *M1*: 1.0	Set *A1*: 1.35	Set *R2*: 1.1
DA-3	Set *A1*: 1.35	Set *M2*: 1.25[a]	Set *A2*: 1.00	Set *M2*: 1.25

[a] This guide recommends that this *M2* value is applied as a partial action factor, not a material factor, because the downdrag force is usually estimated without recourse to the angle of shearing resistance of the ground

The following assumptions are made:

Clause 7.3.2.2(1)P

- The settlement of the soft clay is sufficient to mobilize the maximum downdrag (limiting negative skin friction) along the entire length of the pile in the soft clay layer, $L_D = 5$ m.

Clause 2.4.5.2(8)

- The characteristic value of the long-term downdrag per unit area (calculated in terms of effective stress), on average over the depth L_D, is $q'_{Dk} = 20$ kPa; this is an upper value, as downdrag is detrimental to the pile behaviour.
- The shaft resistance in the stiff clay is upwards (positive skin friction); i.e. it resists the downdrag on the pile along the whole length L_R in this layer.
- The characteristic value of the long-term shaft resistance per unit area in the stiff clay (calculated in terms of effective stress), on average over the depth L_R, is $q'_{sk} = 50$ kPa.
- The ground resistance at the base of the pile is assumed to be negligible ($R_{b,k} = 0$).

Clause 2.4.7.3.4

From *clause 2.4.7.3.4* and the corresponding tables in *Annex A*, the recommended values of the partial factors for the three Design Approaches are given in Table 7.6.

Characteristic and design values of loads

The characteristic loads and resistance are:

- Permanent load:

  $G_k = 300$ kN

- Total downdrag load:

  $F_{D,k} = \pi B L_D q'_{Dk} = \pi \times 0.3 \times 5 \times 20 = 94.2$ kN

- Shaft resistance in the stiff clay layer:

  $R_{s,k} = \pi B L_R q'_{sk} = 47.1 L_R$ (in kN, with L_R in m)

The design action (total vertical compression load) is

$$F_{c,d} = G_d + F_{D,d} = \gamma_G G_k + F_{D,d}$$

and the design resistance is

$$R_{s,d} = R_{s,k}/\gamma_s$$

The condition to be fulfilled for all ULSs is $F_{c,d} \leq R_{s,d}$.

The way the design value of the downdrag load $F_{D,d}$ is obtained from the characteristic value $F_{D,k}$ depends on the Design Approach being used.

Design Approach 1

For geotechnical design to DA-1, Combination 2 is normally considered first, as it is often the prevailing approach, and the result is then checked against Combination 1.

For Combination 2, set *A2* in *Table A.3*, set *M1* (on $R_{s,k}$) and *M2* (on $F_{D,k}$) in *Table A.4* and set *R4* in *Table A.7* are used:

Clause 2.4.7.3.4.2(2)P

- the design value of the downdrag load is taken as

  $F_{D,d} = \gamma_{\varphi} F_{D,k}$

  where $\gamma_{\varphi} = \mathbf{1.25}$ is selected from Table 7.6. Thus,

  $F_{D,d} = \mathbf{1.25} \times 94.2 = 117.8$ kN
- the total design action is

  $F_{c,d} = \gamma_G G_k + F_{D,d} = \mathbf{1.0} \times 300 + 117.8 = 417.8$ kN
- the design resistance is

  $R_{s,d} = R_{s,k}/\gamma_s = 47.1 L_R/\mathbf{1.3} = 36.2\, L_R$ (in kN, with L_R in m)

The condition $F_{c,d} \leq R_{s,d}$ leads to $L_R \geq 417.8/36.2 = 11.54$ m.

For Combination 1, sets *A1*, *M1* and *R1* are used:

Clause 2.4.7.3.4.2(2)P

- the design value of the downdrag load, considered as an unfavourable action, is

  $F_{D,d} = \gamma_G F_{D,k} = \mathbf{1.35} \times 94.2 = 127.2$ kN
- the total design action is

  $F_{c,d} = \gamma_G G_k + F_{D,d} = \mathbf{1.35} \times 300 + 127.2 = 532.2$ kN
- with $L_R = 11.54$ m (from Combination 1), the design resistance is

  $R_{s,d} = R_{s,k}/\gamma_s = 47.1 L_R/\mathbf{1.0} = 47.1 \times 11.54 = 543.5$ kN

Thus, the condition $F_{c,d} \leq R_{s,d}$ is fulfilled and $L_R = 11.54$ m is the final result of the design according to DA-1.

Note that for the structural design of the pile, the larger design value of the action (total vertical compression load) should be considered and is given by Combination 1: $F_{c,d} = 532.2$ kN.

Design Approach 2

Set *A1*, set *M1* and set *R2* are used:

Clause 2.4.7.3.4.3(1)P

- the design value of the downdrag load, considered as an unfavourable action, is

  $F_{D,d} = \gamma_G F_{D,k} = \mathbf{1.35} \times 94.2 = 127.2$ kN
- the total design action is

  $F_{c,d} = \gamma_G G_k + F_{D,d} = \mathbf{1.35} \times 300 + 127.2 = 532.2$ kN
- the design resistance is

  $R_{s,d} = R_{s,k}/\gamma_s = 47.1 L_R/\mathbf{1.1} = 42.8 L_R$ (in kN, with D_R in m)

The condition $F_{c,d} \leq R_{s,d}$ leads to $L_R \geq 532.2/42.8 = 12.43$ m, and for the structural design of the pile $F_{c,d} = 532.2$ kN should be used.

Design Approach 3

Clause 2.4.7.3.4.4(1)P

Sets *A1* (on G_k) or *A2* (on $F_{D,k}$), *M2* (on $F_{D,k}$ and $R_{s,k}$) and *R3* are used:

- the design value of the downdrag load is obtained from $F_{D,d} = \gamma_\varphi F_{D,k}$, where $\gamma_\varphi = \mathbf{1.25}$ is selected from Table 7.6. Thus,

  $F_{D,d} = 1.25 \times 94.2 = 117.8$ kN
- the total design action is

  $F_{c,d} = \gamma_G G_k + F_{D,d} = \mathbf{1.35} \times 300 + 117.8 = 522.8$ kN
- the design resistance in the stiff clay is taken as

  $R_{s,d} = R_{s,k}(\tan \varphi'_d) = R_{s,k}/\gamma_\varphi$

  i.e. by applying the material partial factor γ_φ directly to $R_{s,k}$ (or $q'_{s,k}$) because R_s (or q'_s) is rather insensitive to the variations of $\tan \varphi'_k$. Thus,

$R_{s,d} = 47.1L_R/\mathbf{1.25} = 37.7L_R$ (in kN, with L_R in m)

The condition $F_{c,d} \leq R_{s,d}$ leads to $L_R \geq 522.8/37.7 = 13.87$ m, and for the structural design of the pile $F_{c,d} = 522.8$ kN should be used.

Conclusion

DA-3 requires the longest pile length of the three Design Approaches: $L_R = 13.87$ m, compared with $L_R = 11.54$ m for DA-1 and $L_R = 12.43$ m for DA-2. This is clearly due to the fact that for DA-3 the values of the three partial factors are equal to **1.25** or **1.35**. It can also be argued that the application of the correlation factor ξ to the estimated values of shaft friction q_s in DA-1 and DA-2 (see *clauses 7.6.2.2(8)P* and *7.6.2.3(5)P*) would have led to lower values for $q'_{s,k}$ than in DA-3 (for which they are not used).

Clause 7.6.2.2(8)P
Clause 7.6.2.3(5)P

Example 7.5: uplift of piled structures

Introduction and description of the problem

Clause 7.6.3.1(3)P

In this example of a buried structure subjected to uplift due to water pressure, only the UPL ultimate limit state is checked. It is found that tensile piles are needed to ensure stability against failure due to uplift. The two failure mechanisms given in *clause 7.6.3.1(3)P* which need to be considered in this situation are pull-out of the piles from the ground mass, and uplift of the block of ground containing the piles. The stability of the structure against both of these failure mechanisms is assessed in this example using only the UPL partial factors. However, as stability against failure due to pull-out of the piles involves the strength of the ground providing resistance, this mechanism may also be assessed using the GEO partial factors.

The raft of a buried structure is located $H = 20$ m below the groundwater level, as shown in Fig. 7.4. The water pressures are hydrostatic. The structure is thus subjected to an upward water pressure with a characteristic value of $\gamma_{water}H = 10$ kN/m$^3 \times 20$ m $= 200$ kN/m^2. The structure extends above the groundwater level, so there is no downward water pressure acting on the structure.

The characteristic value of the permanent weight of the structure (calculated with low characteristic values of the unit weights of the materials , e.g. 23.5 kN/m^3 for concrete) is $g_k = 100$ kN per square metre of the raft plan area.

Clause 7.6.3.3(4)P
Clause 7.6.3.3(6)
Clause 7.6.3.3(2)

The structure is founded on tensile piles: initially, it is assumed that there will be one pile every 5 m^2. The pile diameter is $B = 0.5$ m. The characteristic value of the unit shaft tensile resistance of the piles is $q_{s,k} = 70$ kPa. This characteristic value has been established according to one of the methods of *Section 7* (using the 'model pile' procedure including the use of the ξ values or using the 'alternative' procedure; the model factor has been taken equal to **1.0**). The characteristic resistance has to account for the adverse

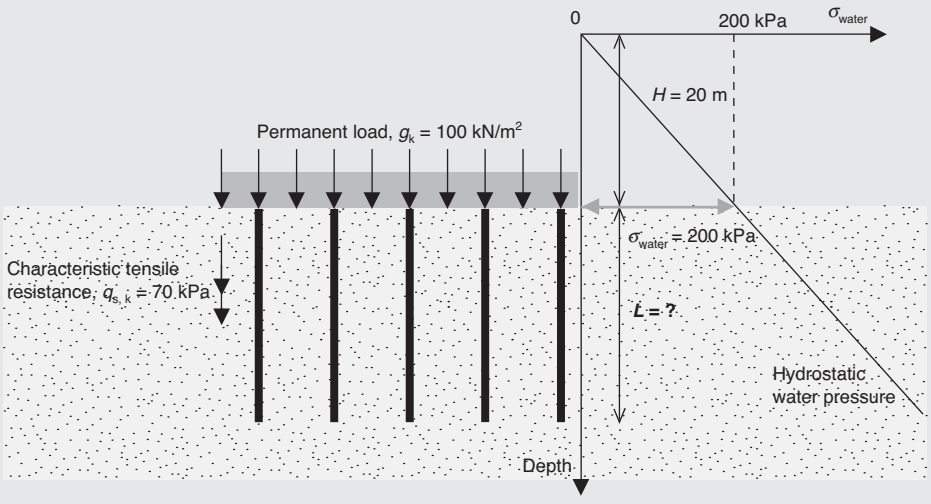

Fig. 7.4. Description of the problem and data for Example 7.5

effect of interaction between the tensile piles when they are close together. The weight density of the soil containing the piles is 20 kN/m^3.

The length L of the piles and their optimum spacing are to be calculated.

For the sake of simplicity, the construction is considered as being infinitely long; side-effects (e.g. friction along the walls of the buried structure and the sides of the block of soil containing the piles) are not considered in the example presented here.

Check against uplift failure

The design requirements to prevent uplift failure are checked according to the following inequality: *Clause 2.4.7.4*

$$V_{\text{dst, d}} \leq G_{\text{stb, d}} + R_{\text{d}} \tag{2.8}$$

The recommended values of the partial factors for this UPL ULS in *Table A.15* are $\gamma_{\text{G, dstb}} = \mathbf{1.0}$ on the permanent destabilizing action and $\gamma_{\text{G, stb}} = \mathbf{0.9}$ on the permanent stabilizing action. Hence:

- the design value of destabilizing uplift force (per m^2) is

  $V_{\text{dst, d}} = \gamma_{\text{G, dst}}\gamma_{\text{water}}H = \mathbf{1.0} \times 10 \times 20 = 200$ kN

- the design value of stabilizing weight (per m^2) is

  $G_{\text{stb, d}} = \gamma_{\text{G, stb}}g_{\text{k}} = \mathbf{0.9} \times 100 = 90$ kN

As $V_{\text{dst, d}} = 200$ kN $> G_{\text{stb, d}} = 90$ kN, the design requirement to prevent uplift failure is $R_{\text{d}} \geq 110$ kN (per m^2), to be provided by tensile piles.

Design value of pile resistance and pile length: single-pile tensile failure

If the spacing of the piles is one pile every 5 m^2, as shown in Fig. 7.5, the design values of the destabilizing and stabilizing forces over each 5 m^2 area are $V_{\text{dst, d}} = 5.0 \times 200 = 1000$ kN and $G_{\text{stb, d}} = 5.0 \times 100 = 450$ kN, respectively, so that tensile load to be carried by each pile is

$$R_{\text{d}} \geq V_{\text{dst, d}} - G_{\text{stb, d}} = 1000 - 450 = 550 \text{ kN}$$

The characteristic tensile resistance of a single pile is given by

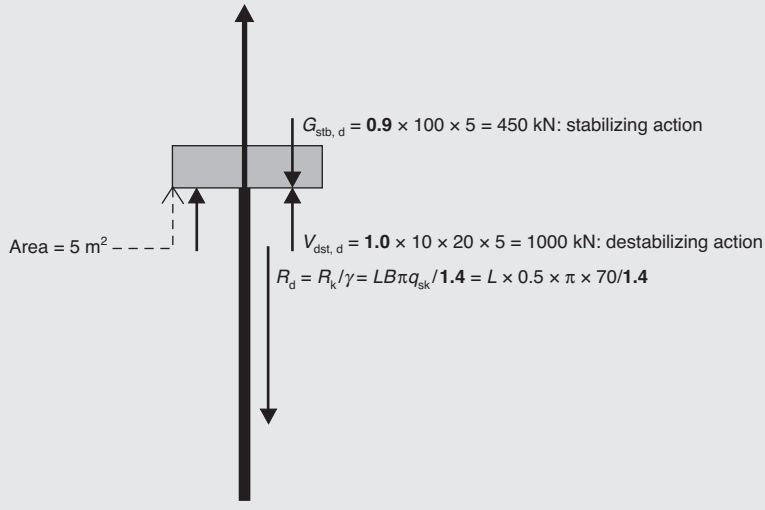

Fig. 7.5. Equilibrium equation for a single pile every 5 m^2 under the UPL condition

$R_k = \pi B q_{s,\,k} L = 3.14 \times 0.5 \times 70 \times L = 110L$ (in kN, with L in m)

The design tensile resistance of the single pile R_d is determined by applying the UPL partial factor $\gamma_{t,\,s}$ = **1.40** to the characteristic tensile resistance of the pile R_k (see *Table A.16*):

$R_d = R_k/\gamma_{t,\,s} = (110 \times L)/\mathbf{1.4}$

Its length L is readily found from *inequality* (*2.8*):

$550 \leq 110 \times L/\mathbf{1.4}$

Thus, $L \geq 7.0$ m; i.e. the minimum required length for a single pile to fulfil the UPL requirement is 7.0 m.

Note: the self-weight of the piles has been neglected in the previous calculation. If the submerged weight of the pile is included, one finds $L = 6.85$ m.

Block failure of the structure and the piles and soil included between the piles

Clause 7.6.3.1(4)P
Clause 2.4.7.4(1)P

The length of the piles and their spacing should be checked to ensure that the ULS of block failure, i.e. uplift failure of the structure and the block of soil containing the piles, is not exceeded. *Clause 7.6.3.1*(*4*)*P*, together with *clause 2.4.7.4*(*1*)*P*, imply that the inequality for block failure should be written in terms of total stresses. In the following, both total stress and the effective stress analyses are carried out for the sake of comparison.

(a) Total stress analysis

- In a total stress analysis, the downward force per square metre is the weight of the structure (100 kN) plus the total weight per square metre of the block of soil containing the piles:

  $g_k + \gamma_{soil} L$

  where L is the length of the piles in metres, and γ_{soil} is the weight density of the soil in kilonewtons per cubic metre. The greater weight of the piles compared with the weight of the block of soil has been ignored in this calculation as this is conservative and has little effect on the result.
- The upward force per square metre on the plane through the pile bases is the water pressure:

$\gamma_{water}(H + L)$

The partial factors $\gamma_{G,\,stb}$ and $\gamma_{G,\,dst}$ are applied to the stabilizing actions and to the destabilizing actions on the block of soil and structure. The design inequality for the UPL ULS becomes *Clause A.4(1)P*

$\gamma_{G,\,dst}\gamma_{water}(H + L) \leq \gamma_{G,\,stb}(g_k + \gamma_{soil}L)$

Inserting the recommended values in *Table A.15* for the partial factors, $\gamma_{G,\,stb} = \mathbf{0.9}$ and $\gamma_{G,\,dst} = \mathbf{1.0}$, and rearranging yields

$L \geq (\mathbf{1.0} \times 10 \times 20 - \mathbf{0.9} \times 100)/(\mathbf{0.9} \times 20 - \mathbf{1.0} \times 10) = 13.75$ m

(b) Effective stress analysis

- Using an effective stress analysis, the downward force per unit area is the weight of the structure per square metre plus the submerged (effective) weight per square metre of the block of soil containing the piles:

  $g_k + \gamma'_{soil}L$

- The upward force per square metre is the water pressure acting on the raft:

  $\gamma_{water}H$

Applying the partial factors $\gamma_{G,\,stb}$ and $\gamma_{G,\,dst,}$ the design inequality becomes

$\gamma_{G,\,dst}\gamma_{water}\,H \leq \gamma_{G,\,stb}(g_k + \gamma'_{soil}\,L)$

Inserting the recommended values for the partial factors, $\gamma_{G,\,stb} = \mathbf{0.9}$ and $\gamma_{G,\,dst} = \mathbf{1.0}$, yields

$L \geq (\mathbf{1.0} \times 10 \times 20 - \mathbf{0.9} \times 100)/(\mathbf{0.9} \times 10) = 12.2$ m

Comparison between total stress and effective stress analyses

The total stress analysis yields a more conservative result than the effective stress analysis ($L \geq 13.75$ m compared with $L \geq 12.2$ m). Note that the total stress analysis would have yielded the same result as the effective stress analysis, if the water pressures on both sides of the inequality had been treated in the same manner, i.e. applying the same (unfavourable) partial factor $\gamma_{G,\,dst}$ to them on both sides of the inequality (according to the 'single-source' principle).

In the following section, the more conservative result (the result of the total stress analysis), is adopted: $L \geq 13.75$ m. This is because:

- the recommended values of *Table A.15* are meant to be used with the total stress approach, as indicated in *clause 7.6.3.1(4)P* *Clause 7.6.3.1(4)P*
- the equivalent overall factor of safety obtained by using the recommended partial factor values from *Table A.15* for $\gamma_{G,\,stb}$ and $\gamma_{G,\,dst}$ is already very low ($\gamma_{G,\,dst}/\gamma_{G,\,stb} = 1.1$). *Clause 2.4.7.4(2)P*

As this pile length is longer than $L = 7$ m, as previously obtained, it is found that, in this example, the length of the piles is determined by the uplift failure criterion of the block of soil containing the piles and not by the sum of the tensile resistances of the single piles.

Optimization of the pile spacing

Since the pile length required to ensure that the ULS of uplift due to tensile resistance failure of the piles is not exceeded, with one pile every 5 m^2, is 7 m, while the length of the piles required to ensure safety against uplift of the block of soil containing the structure and the piles is 13.75 m, the optimum spacing of the piles so that these two failure mechanisms are just not exceeded can now be determined.

As the piles have a design length of 13.75 m and a characteristic tensile resistance per unit length of 110 kN/m, their design tensile resistance becomes

$R_d = 13.75 \times 110/\mathbf{1.4} = 1080$ kN

Since the design load to be supported per square metre is 110 kN, one pile is needed every 1080/110 = 9.8 m^2. This is the optimum pile spacing for both pile resistance failure and block failure to be just not exceeded.

Design value of the tensile force in a pile for ULS structural pile design

The structural design of the piles should be performed with the most severe UPL and STR action factors. Clearly, STR factors are more severe than UPL factors, so that only the STR check has to be performed with the STR action factors.

The permanent weight of the structure is a favourable action, so its design value is calculated using the action factor for permanent favourable loads in STR and GEO ULSs (*Table A.3*):

$G_d = \mathbf{1.0} \times 100 \times 9.8 = 980$ kN

The upward force due to the water pressure of 200 kN/m^2 is an unfavourable action, so its design value acting on the pile is calculated using the action factor for permanent unfavourable loads in STR and GEO ULSs (*Table A.3*):

$W_d = \mathbf{1.35} \times 200 \times 9.8 = 2646$ kN

Hence, the design action for structural design of the pile, denoted here as negative as it is a tensile force, is

$F_d = G_d - W_d = 980 - 2646 = -1666$ kN

Discussion

(1) In the example above, for convenience, the resisting block of soil has a simplified shape. More refined shapes may be used, accounting for the conical shape of the stabilizing soil mass at the base of the piles and around the edge piles.
(2) The equivalent overall factor of safety for the single pile under UPL conditions is about 1.55ξ (i.e. (**1.4**/**0.9**)ξ), ξ being the correlation factor used to obtain the characteristic value of the shaft resistance for the piles. This is a rather low value, which can be increased by a model factor. The characteristic value of the skin friction should account for the adverse effect of interacting tensile piles.
(3) The recommended value for the equivalent overall factor of safety for block failure under UPL conditions is about 1.1 ($\gamma_{G,\,dst}/\gamma_{G,\,stb}$). This is a rather low value, which may be increased by a model factor, if necessary.

CHAPTER 8

Anchorages

This chapter is concerned with the geotechnical design of temporary and permanent anchorages as presented in *Section 8* of EN 1997-1. The structure of the chapter largely follows that of *Section 8*:

8.1.	General	*Clause 8.1*
8.2.	Ultimate limit state design	*Clause 8.5*
8.3.	Structural design of anchorages	*Clause 8.5.4*
8.4.	Load testing of ground anchorages	*Clauses 8.7* and *8.8*

In common with other sections of EN 1997-1, *Section 8* gives only the basic requirements for the design of anchorages without describing or specifying methods. To assist the designer, this chapter describes how to determine the design value of the anchorage load from calculations of structures tied with anchorages and explains how to assess their design resistance. An example, using the anchorage reaction calculated in Example 9.2, illustrates the process, from the calculated anchorage reactions obtained from the design of the retaining wall to the specification of the anchorage resistances to be proved by the suitability and acceptability tests.

8.1. General

Anchorages are characterized by a free length and a system to transmit tensile force to the resisting ground. Anchorages may be prestressed (e.g. grouted anchorages) or non-prestressed (e.g. deadman anchorages). Systems with bonding to the ground over the whole length of the anchorage, such as nails or piles, are not covered in *Section 8* of EN 1997-1. *Clause 8.1.1(2)P*

Section 8 is related to *Sections 9* ('*Retaining structures*'), *10* ('*Hydraulic failure*'), *11* ('*Overall stability*') and *12* ('*Embankments*'), since the design value of the action to be sustained by the anchorage in ultimate limit states (ULSs) and serviceability limit states (SLSs) has to be determined from the requirements of one or more of these sections. Uplift failure of a group of anchorages is checked using the same principles as for pile groups subjected to UPL conditions, and is described in Chapter 7 of this guide.

Section 8 refers to EN 1537: 1999, *Ground Anchors*, for definitions and guidance on the execution and testing of grouted anchorages. It should be noted that there is not always perfect consistency between EN 1537 and EN 1997-1. The requirements for geotechnical design in EN 1997-1 supersede those in EN 1537. Section 8.4 of this guide gives some consideration to anchorage load testing. *Clause 8.1.2* *Clause 8.4* *Clause 8.5.4* *Clause 8.7*

The tendon inclination should be such that self-prestressing is provided by deformations due to a potential failure mechanism. This requirement will usually be met with flat anchorages that cross the failure surface at an angle of less than 90°. *Clause 8.4(9)P*

8.2. Ultimate limit state design

8.2.1. Design of the anchorage

The basic requirement of the ULS design of anchorages is:

Clause 8.5.1(1)P

$$P_d \leq R_{a,d} \tag{8.1}$$

where $R_{a,d}$ is the design value of the anchorage pull-out resistance and P_d is the design value of the anchorage load (i.e. the design value of the load to be sustained by the anchorage). The anchorage load P_d is obtained as the 'reaction' in the design of the structure (e.g. a retaining wall where the anchorage resists earth pressures, a slope where anchorages resist sliding of the soil mass, or a buried structure where anchorages resist uplift pressures). For prestressed anchorages, P_d is composed of the prestress force P_0 (at lock-off) and the variations in the force during construction (further excavations) and the life of the structure (loadings). The anchorage prestress (lock-off) force P_0 is often a favourable action in the design of geotechnical structures (e.g. a retaining wall, a slope or a raft subjected to uplift) (Fig. 8.1).

Clause 8.2(1)P The anchorage has to be designed to sustain the anchorage load, P_d, to prevent (Fig. 8.2):

- Geotechnical failure: for grouted anchorages, failure at the interface between the ground and the body of grout, or failure by excessive displacement of the anchor head or by creep; for deadman anchorages, failure by insufficient resistance of the ground in front of the deadman.
- Structural failure: failure of the tendon or anchor head; for grouted anchorages, failure of the bond between the tendon and the grout.

Clause 8.3(2)P The anchorage load P_d is thus an unfavourable action for the geotechnical and structural design of the anchorage.

Clause 8.3(1)P It should be noted that forces can be applied to the anchorage during prestressing which may exceed the forces required for the design of the structure, e.g. during acceptance tests.

8.2.2. Design value of the anchorage load

Clause 8.5.5(1)P The design value of the anchorage load, P_d, is obtained from:

- the design of the supported structure in ULSs and, if relevant,
- the design of the supported structure in SLSs.

When using a calculation model for the supported structure where the earth pressures are introduced as known actions in the calculations (e.g. see Chapter 9, where the design of embedded walls using equilibrium methods or an equivalent beam is discussed), an anchorage is usually modelled as a support. In these models, the lock-off force P_0 is not introduced in the calculation. The calculated reaction in the support is the design value of the anchorage load P_d in the design situation considered (ULS or SLS). The prestress (lock-off) force may be taken as a fraction, e.g. 50 to 70% or even more of the SLS reaction.

When using a (numerical) calculation model simulating the interaction between the soil and the supported structure, the anchorages are usually introduced as (linear) springs with appropriate stiffness (e.g. see Chapter 9, where the design of embedded walls as beams on non-linear springs and finite elements is discussed); in such models the earth pressures are not known at the start of the calculations. Prestress forces, P_0, are introduced as favourable actions (with $\gamma_G = 1.0$). The reactions calculated in the anchorages are design values of the anchorage loads in the (ULS or SLS) design situation considered.

The choice of calculation model will depend on the required accuracy of the results. Models where earth pressures are introduced as known actions are usually well suited to ULS design for simply supported walls. They are sometimes used in simplified methods for the SLS check, using appropriate stresses (e.g. pressures at rest) and stress distributions. An interaction model is often used in ULS design of embedded walls supported by several rows of anchorages or when the length of the wall deviates significantly from the length

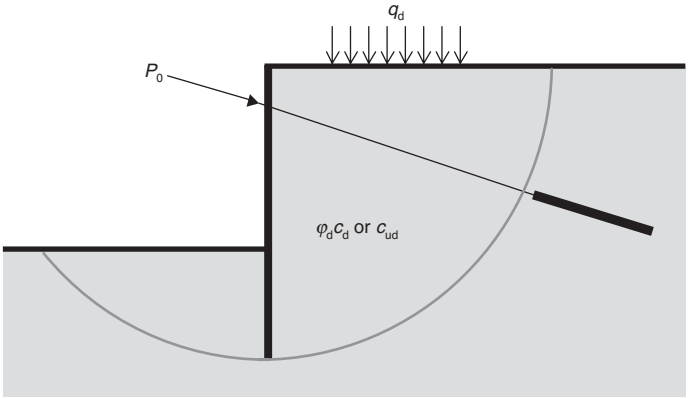

Fig. 8.1. Design of the retaining wall. The prestress force (lock-off), P_0, is a favourable action in the design of the wall and for overall stability

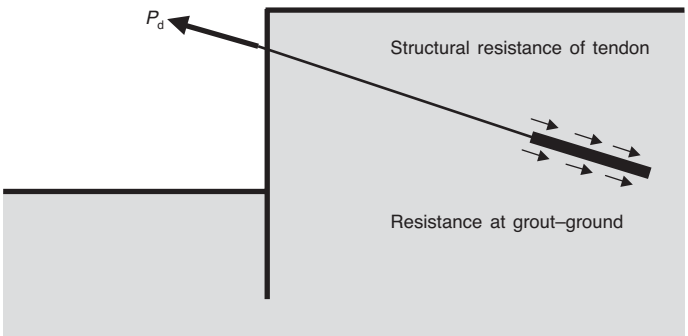

Fig. 8.2. The design value, P_d, obtained from the wall design has to be sustained by the anchor: it is the design value of the action on the anchorage

corresponding to free earth support conditions, and when the SLS check requires the calculation of a value of the displacement. These aspects are considered in more detail in Chapter 9 of this guide.

ULS design calculations for the supported structure will deliver the value of the anchorage load P_d for whichever of the three Design Approaches is adopted. For STR/GEO ULS design checks, the partial factors will be taken from *Tables A.3* and *A.4*. For UPL design situations, the partial factors will be taken from *Tables A.15* and *A.16*.

SLS design calculations will deliver the value of the anchorage load P_{SLS} complying with the serviceability criteria. This value may be more severe for the design of the anchorage than the value obtained from the ULS design, especially for stiff walls or stiff anchorages in heavily over-consolidated soils or in cases where very strict serviceability (displacement) criteria apply. In such cases, the earth pressures may not drop to their active values, and the design of the anchorage can be governed by the serviceability criteria for the retaining wall. The design value of the anchorage load P_d should then be assessed for the anchorage load obtained in the serviceability design condition.

The following subsections present examples of the assessment of ULS anchorage loads for ULS and SLS design of the supported structure.

Determination of the design anchorage load starting from the ULS check of the structure

When **non-prestressed** anchorages are used, or when the serviceability requirements are not stringent, the first step in the design is usually a check on the ULSs of the geotechnical

structure (retaining wall, reinforced slope, anchored raft etc.). For STR/GEO ULS design checks, the partial factors will be taken from *Tables A.3* and *A.4* according to the adopted Design Approach; for UPL design situations, the partial factors will be taken from *Tables A.15* and *A.16*. The ULS calculation delivers design values of the anchorage loads P_d (as the design value of the 'reactions' of the supported structure), which will be the action used for checking the ULS of the anchorage according to *clause 8.5*.

For **prestressed** anchorages, the prestress (lock-off) force will be introduced as an action in the calculations using the partial factors for favourable actions ($\gamma_F = 1.0$). The soil–structure interaction models calculate a 'reaction' (e.g. the anchorage load to restrain an embedded wall or to tie down a raft), since the anchorage prestress force is a favourable action for the geotechnical structure. As for non-prestressed anchorages, the ULS calculation will deliver the design values of the anchorage loads necessary to ensure the stability of the structure in ULS design conditions.

Figure 8.3 illustrates this design method.

In overall ULS stability calculations of the type illustrated in Fig. 8.4, when using the 'assumed failure surface method' (see Section 11.5 of this guide), the design value of the anchorage resistance (or of the part of the anchorage outside the failure surface) is introduced into the stability calculation as a favourable action.

Determination of the ULS design anchorage load starting from an SLS check of the structure

Clause 8.5.5(1)P

When prestressed anchorages are used, the minimum prestress (lock-off) force P_0 and the corresponding anchorage reaction in SLS are often determined by SLS calculations, to avoid excessive displacements of the supported structure. In such cases the ULS check of the anchorage is performed using the following procedures.

(1) When a soil–structure interaction model is applied, e.g. an elastic, prestressed spring model for the anchorage and a non-linear spring model for the soil interacting with the retaining structure (see Chapter 9), the lock-off force $P_{0,\,SLS}$ is calculated, in a first step, by trial and error until the SLS displacement criteria are met. The ULS check of the structure is performed in a second step using the partial factors for ULS design. In this ULS calculation, the prestress (lock-off) force $P_{0,\,SLS}$ is a favourable action on the structure, and should be treated accordingly (partial action factor $\gamma_F = 1.0$). The ULS calculation will deliver the design value P_d of the anchorage load. Figure 8.5 illustrates the two-step procedure.

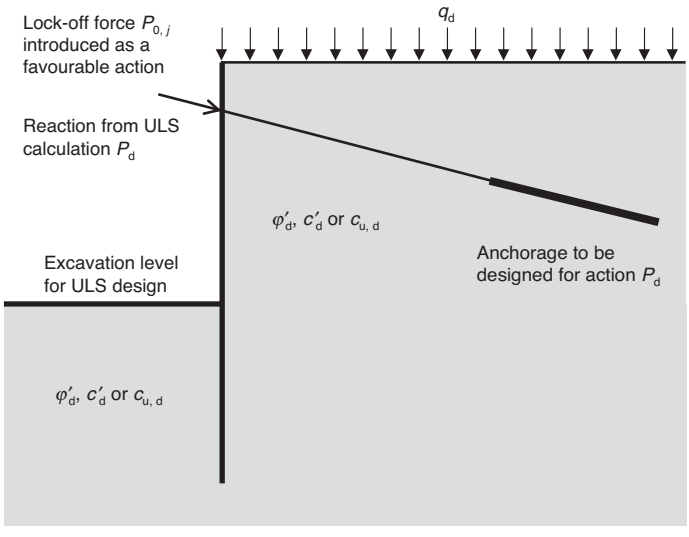

Fig. 8.3. ULS design model (STR plus GEO) for an embedded wall in which the prestress force is introduced as a favourable action; the calculation delivers a design value of the anchorage load

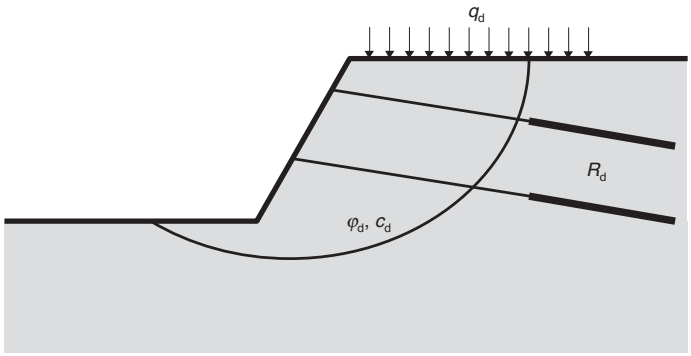

Fig. 8.4. Design model for overall stability using assumed failure surface. The design value of the anchorage resistance, R_d, is entered into the calculation

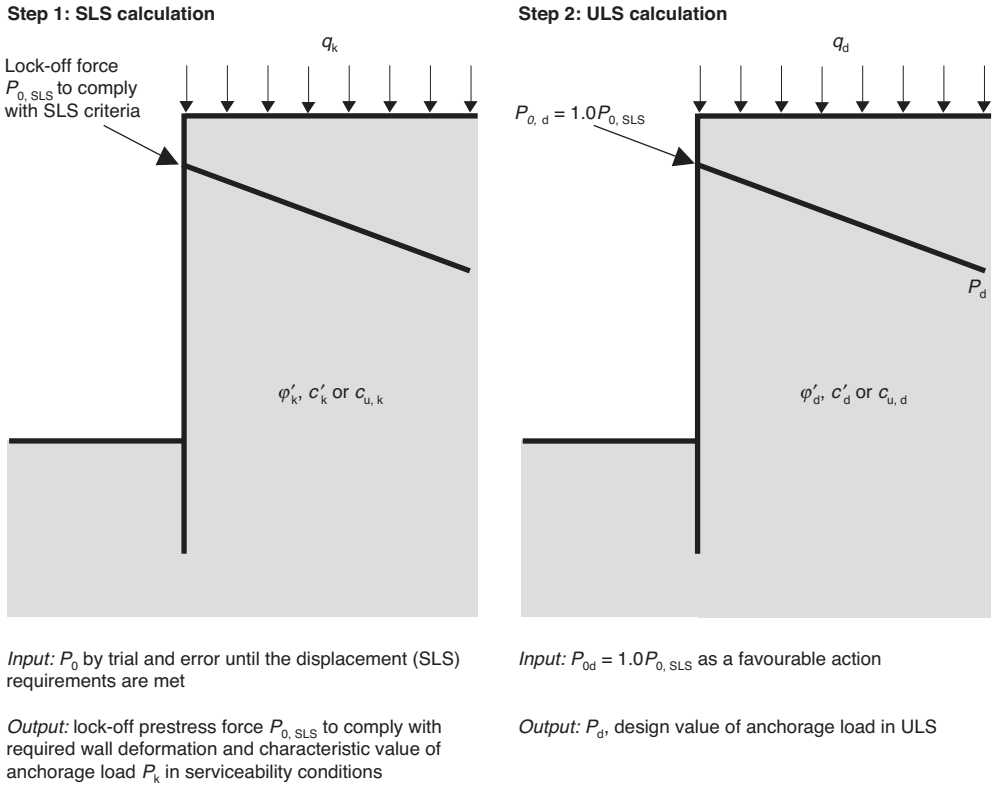

Fig. 8.5. Example of the sequence of calculations to obtain the design ULS anchorage load starting from an SLS check of the structure, using a soil–structure interaction model. The ULS design of the anchorage is based on the greater of $1.35P_k$ and P_d

It is important to note that in Design Approaches 1 (DA-1) and 2 (DA-2), P_d is at least equal to $\gamma_G P_k$ due to the use of the partial action factor γ_G in *Table A.3* (recommended value $\gamma_G = 1.35$) applied in DA-1 Combination 1 and DA-2 (see Chapter 9 of this guide for more details). In Design Approach 3 (DA-3), values of P_d/P_k as low as 1.1 or 1.2 can be found, e.g. for stiff walls and highly prestressed anchorages. As the recommended values of partial resistance factors γ_a for ULS design of the anchorages have been established on the assumption that $P_d \geq 1.35P_k$, it is advisable to perform the ULS design of the anchorages with a design value of the anchor load equal to the more severe of P_d and $\gamma_{model}P_k$, where P_d results from the ULS design of the structure and P_k results from the SLS design of the structure. γ_{model} is the model factor permitted in *clause 8.6(4)*. A value for γ_{model} equal to the value of γ_G for unfavourable actions is recommended in this guide ($\gamma_G = 1.35$ itself being recommended by EN 1997-1).

Clause 8.6(4)

Clause 8.6(3) When using calculations based on spring models, the most adverse combination of the low and high value of the spring constant of the anchorage and of the prestress (lock-off) force, respectively, should be selected. An estimate of the maximum anchorage stiffness may be made from the total length of the anchorage minus the tendon bond length; an estimate of the minimum anchorage stiffness is made from the total length of the anchorage minus half the tendon bond length.

(2) When the SLS calculations are performed using limit equilibrium methods or equivalent beam methods (i.e. methods where the earth pressures acting on the wall are assumed to be known before the start of the calculations), the calculated SLS reaction should be multiplied by a model factor to obtain the design value of the anchorage load. The value of the model factor may be set in the National Annex. It is recommended that a value of not less than the value of γ_G for unfavourable actions be used ($\gamma_G = 1.35$ itself being recommended by EN 1997-1).

Clause 8.6(4)

8.2.3. Design value of the anchorage resistance

Clause 8.5.1(2) The design value of pull-out resistance may be determined from the results of tests or by calculations.

Clause 8.5.2 *Pull-out resistance determined from the results of tests*

Clause 8.4(10)P For grouted anchorages and screw anchorages, the characteristic value of the pull-out resistance $R_{a,k}$ shall be determined on the basis of suitability tests. The design value of the anchorage resistance $R_{a,d}$ is then obtained from the characteristic value by applying a partial factor γ_a:

$$R_{a,d} = R_{a,k}/\gamma_a \qquad (8.2)$$

Clause 8.5.2(2) Recommended values of γ_a are given in *Table A.12* for STR/GEO and may be changed in the National Annex. The recommended value $\gamma_a = 1.0$ for DA-3 (see column *R*3) does not apply for calculating the design value of anchorage resistance from pull-out tests since, in DA-3, the resistance of the anchorages is calculated using the shear strength parameters of the ground. This comment also applies in the case of the resistance of piles obtained from load tests (see Chapter 7). For UPL design situations, recommended values of γ_a are given in *Table A.16*.

Clause 8.5.2(3) The characteristic value $R_{a,k}$ should be related to the test results through a correlation factor ξ_a that accounts for the number of tests and the variability of the test results. If a ξ_a value is introduced, it may relate, for example, the minimum of the measured resistances $R_{a,\,measured,\,min}$ and mean value of the measured tests resistances $R_{a,\,measured,\,mean}$ to the characteristic value $R_{a,k}$ by a relationship similar to the one introduced for piles:

$$R_{a,k} = \mathrm{Min}\{R_{a,\,measured,\,mean}/\xi_{a,1};\ R_{a,\,measured,\,min}/\xi_{a,2}\}$$

Recommended values of the correlation factors ξ_a are not given in EN 1997-1; they may be set by the National Annex. Values for $\xi_{a,1}$ could range from 1.20 (one test) to 1.10 (three or more tests); $\xi_{a,2}$ would then range from 1.20 (one test) to 1.05 (three or more tests).

Combining *inequality* (*8.1*) and *equation* (*8.2*) yields

$$P_d \leq R_{a,d} = R_{a,k}/\gamma_a \quad \text{or} \quad R_{a,k} \geq P_d \gamma_a \qquad \text{(D8.1)}$$ *Clause 8.5.2(1)P*

If the anchorage load P_d is known, e.g. from the calculation of the wall, the requirement becomes that the pull-out resistance of the anchorages is the more stringent of

$$R_{a,\,measured,\,min} \geq P_d \gamma_a \xi_{a,1}$$

$$R_{a,\,measured,\,mean} \geq P_d \gamma_a \xi_{a,2}$$

Pull-out resistance determined by calculations *Clause 8.5.3*

A calculated design value of the pull-out resistance has to be determined according to the principles of *clauses 2.4.7* and *2.4.8*. *Clause 8.5.3(1)P*

Deadman anchorages

A deadman anchorage uses the passive resistance of the soil in front of it. The design value of this passive resistance is calculated from the soil shear strength parameters c'_k and φ'_k (or c_{uk}) by applying the partial factors in *Table A.4* and *Table A.13* as follows:

- DA-1 and DA-3: obtain design values of the soil shear strength parameters by applying the partial factors of set *M1* (DA-1 Combination 1) or *M2* (DA-1 Combination 2 and DA-3) according to *Table A.4*. The values of $\gamma_{R,e}$ are equal to 1.0 in both approaches.
- DA-2: divide the characteristic resistance of the deadman anchorage (calculated using characteristic values of soil shear strength parameters) by the partial factor $\gamma_{R,e}$ of set *R2* in *Table A.13*.

Grouted or screw anchorages

The characteristic resistance of grouted anchorages may be assessed by using charts or other empirical rules and correlations. Such charts should have been established from experimental data and should deliver characteristic values of the anchorage pull-out resistance. EN 1997-1 is unclear on a method to assess the design value of the pull-out resistance when such charts are used. Due to the direct correlation between these charts and the results of load tests, it is logical to determine the design value of the pull-out resistance by applying *equation* (*8.2*):

$$R_d = R_{a,k}/\gamma_a$$

where γ_a is taken from *Table A.12* (STR/GEO design situation) or *Table A.16* (UPL design situation). A complementary model factor may be used to account for the uncertainty of such charts.

Lock-off force of prestressed anchorages

EN 1997-1 gives no recommendations about the lock-off force, but it is advisable to select a value sufficiently lower than the characteristic resistance $R_{a,k}$ to avoid creep deformation. EN 1537 recommends that the lock-off force should not be greater than 0.65 times the characteristic resistance $R_{a,k}$ of the grouted anchorage.

8.3. Structural design of anchorages *Clause 8.5.4*

The structural design of the anchorage is performed using EN 1992, EN 1993 and EN 1537, with the design value of the anchorage load P_d as obtained above. *Clause 8.5.4(2)P*

The requirement is that a ULS is first attained in the soil (e.g. bond failure between the grout and the soil or passive failure of a deadman anchorage), before a ULS is reached in the material of the anchorage. The reason for this is to avoid brittle failure in the anchorage material, as failure in the soil is often more ductile and gives 'early warning'. For grouted anchorages, *inequality* (*8.3*) may be rewritten as *Clause 8.5.4(1)P*

$$R_{t,\,d} = R_{t,\,k}/\gamma_{structural,\,a} \geq R_{a,\,d} = R_{a,\,k}/\gamma_a \quad \text{(D8.2)}$$

or

$$R_{t,\,k} \geq R_{a,\,k}(\gamma_{structural,\,a}/\gamma_a)$$

where $R_{t,\,k}$ is the characteristic material resistance of the anchorage and $\gamma_{structural,\,a}$ is the partial factor for the anchorage material.

In contrast to this, EN 1537 recommends, in its Annex D (informative), clause D.5.3, that $R_{a,\,k} > R_{t,\,k}$. The EN 1997-1 and EN 1537 requirements are both fulfilled only if $(\gamma_{structural,\,a}/\gamma_a)$ is smaller than 1.0. The EN 1537 requirement in fact ensures that an SLS failure occurs first in the tendon and then in the bond between grout and soil. In a case of conflict between these requirements, EN 1997-1 supersedes EN 1537.

8.4. Load testing of ground anchorages

Clause 8.8

8.4.1. Acceptance tests

Clause 8.1.2.3
Clause 8.4(10)P

These tests are performed on all working anchorages to confirm that each meets the design requirements. *Clause 8.4(10)P*, second sentence, requires the design resistance to be checked by acceptance tests, in accordance with EN 1537. EN 1537 states in its Annex E (informative) that the proof load, P_P, is the greater of $1.25P_0$ and $R_{a,\,d}$ when the anchor is loaded in incremental steps ('test method 3'), or $P_P = 1.25P_0$ when the anchor is loaded in cycles ('test methods 1 and 2') from a datum load to the test load; P_0 is the calculated prestress force (lock-off) and $R_{a,\,d}$ is the design value of the anchorage resistance. Applying the test load in incremental steps is the most common method. The acceptance criterion is expressed as a maximum deformation per logarithmic time unit.

As the design value of the resistance of a grouted anchorage $R_{a,\,d}$ is close to its characteristic resistance $R_{a,\,k}$ (recommended value of partial factor $\gamma_a = 1.1$, see *Annex A*, *Table A.12*) and to the failure load, the combination of the requirements of EN 1997-1 and EN 1537 leads to very high values of the proof load compared with the working load of the anchorage; on average, a proof load $P_p = R_{a,\,d}$ (where $R_{a,\,d} \geq P_d$) would then become as much as 1.4–1.7 times the working load under service conditions, P_k, because the ratio between anchorage load in a ULS and in an SLS, P_d/P_k, usually ranges from 1.4 to 1.7. The acceptance criteria set out in EN 1537, when applied to a proof load equal to $R_{a,\,d}$ ('method 3'), may be severe. It should be remembered in this respect that, in EN 1537, a value of $\gamma_a \geq 1.35$ is applied (EN 1537, Annex D), whereas in EN 1997-1 the recommended value is 1.1. This guide therefore recommends a broad interpretation of the wording '*shall comply with EN 1537*' and '*meets the design requirement*'; the consequences of running acceptance tests up to the design resistance, R_d, of the anchorage should be carefully evaluated. The acceptance test should be planned in such a way that the proof load remains far enough from pull-out failure to avoid adverse affects on the anchorage, but close enough to prove that the as-built anchorage will meet the design requirements. It may be preferable to apply a proof load equal to the more severe of 1.1–1.3 times the load under serviceability conditions (the 'working load') or 1.25 times the lock-off force, and to put an acceptance criterion on a measured deformation in a defined time interval.

Clause 8.7

8.4.2. Suitability tests

Clause 8.1.2.4

These tests are performed on selected anchors to confirm that a particular anchor design is adequate or to determine the characteristic resistance of the anchorage. Suitability tests

Clause 8.4(10)P

should preferably be run to failure in order to assess the characteristic pull-out resistance of the anchorage, $R_{a,\,k}$, from the measured pull-out resistance, R_a. The pull-out resistance R_a is defined as the load corresponding to the vertical asymptote of the creep slope curve α in millimetres per log cycle time (time in minutes) plotted against the applied load. If the asymptote cannot be defined, R_a is the load corresponding to $\alpha = 5$ mm (see EN 1537, Annex E.4.4 (informative), Fig. E5).

The characteristic value of the pull–out resistance may be related to the results of the suitability tests by applying a ξ factor (see Section 8.2.3 above). *Clause 8.5.2(3)*

If a certain design resistance $R_{a,d} \geq P_d$ has to be proven, the proof load should be at least equal to the expected resistance of the anchorage, i.e. to

$$P_p \geq \xi_a R_{a,k} = \xi_a R_{a,d} \gamma_a \geq P_d \gamma_a \xi_a \quad \text{(D8.3)}$$

where P_d is the calculated design value of the anchorage load.

At this value of the proof load, P_P, the anchorage is adequate if it does not reach a state of failure between grout and ground, as defined above, e.g. $\alpha < 5$ mm.

The establishment of test standards for anchorages is one of the tasks of CEN Technical Committee 341 on ground investigation and testing.

8.4.3. Investigation tests

Clause 8.1.2.5
Clause 8.4(8)P

Investigation tests are necessary for new types of anchorage or for ground or load conditions where no experience is available for the considered anchorage system. These tests are required to proceed to failure between the grout and the soil, or are performed as creep tests.

8.4.4. Proof load as an action to the structure

The proof load is an unfavourable (characteristic, monotonic) action applied to the structure. Thus, the structure (the wall, waling, etc.) has to be checked for this unfavourable action according to the principles of *clause 2.4.7*.

Example 8.1: assessment of proof load for suitability and acceptance tests

The lock-off force and design values of the anchorage load per metre of wall in an SLS and a ULS are obtained from the SLS and ULS calculations given in Chapter 9 (see Example 9.2: Table 9.6, for DA-1, DA-2 and DA-3 using the 'limit equilibrium model' (LEM); Table 9.7, for DA-2 using a spring model; and Table 9.9 for SLSs). The anchorages are spaced at 2.4 m intervals, and inclined at 10° to the horizontal. The design value of the action to be sustained by the anchorage, P_d, in the ULS, and the SLS is obtained by multiplying the design value of the horizontal component of the anchor force F_h by the distance between the anchors (2.4 m) and correcting for the anchorage inclination by a factor 1/cos 10° = 1.015, as summarized in Table 8.1.

In this example, the proof load to be applied to the anchorages in suitability and acceptance tests will be assessed. At least three suitability tests will be performed.

The design value of the anchorage load in ULSs is greater than **1.35** times the anchorage load in SLSs; thus, the ULS design of the anchorage will start from the ULS anchorage loads.

Table 8.2 indicates:

- the required characteristic anchor resistances,

  $R_{a,k} = R_{a,d} \gamma_a \geq P_d \gamma_a$

- the required resistances to be proved by the suitability tests,

  $R_{a,\,measured,\,min} \geq R_{a,k} \xi_{a,2}$

for a $\xi_{a,2}$ value equal to **1.05**, or $R_{a,\,measured,\,mean} \geq R_{a,k} \xi_{a,1}$ for $\xi_{a,1} = \mathbf{1.10}$ (three tests). The values of $\xi_{a,1}$ and $\xi_{a,2}$ are chosen for the purposes of this example. As the partial factors of DA-3 cannot be used to check the suitability of anchorages from the results of a load test, the partial factors of DA-2 are used to meet the requirements for the proof loads in the suitability tests. Of course, the value P_d from the wall calculations of DA-3 are used; the required proof loads for the acceptance test on each anchor are determined according to

Table 8.1. Design value of anchorage load P_d obtained from SLS and ULS design of the retaining wall using DA-1, DA-2 and DA-3

	ULS and SLS design value of horizontal anchorage load F_h from wall design (kN/m)						ULS and SLS design value of anchorage load P_d (kN/anchorage)				
Lock-off force (kN/m)	SLS	DA-1 LEM	DA-2(L) LEM	DA-2(S) Spring model	DA-3 LEM	Lock-off force (kN)	SLS	DA-1 LEM	DA-2(L) LEM	DA-2(S) spring model	DA-3 LEM
100	112	172	228	157	172	244	273	419	557	383	419

Table 8.2. Overview of required characteristic anchor resistance and proof loads for suitability and acceptance tests (all values are axial forces in the anchorage, in kN)

Lock-off force, P_0	Anchor load in SLSs, P_{SLS}	Required characteristic anchor resistance, $R_{a,k}$ ($\gamma_a = 1.1$)				Required proof load for suitability tests ($\xi_a = 1.1$ and 1.05)					Required proof load P_p for acceptance tests				
		DA-1	DA- 2(L)	DA-2 (S)	DA-3[a]		DA-1	DA-2 (L)	DA-2 (S)	DA-3[a]		DA-1	DA-2 (L)	DA-2 (S)	DA-3
244	273	461	611	421	461	Mean	484	642	442	484	EN 1537	419	557	383	419
						Minimum	507	672	463	507	**Realistic**	**313**	**313**	**313**	**313**

[a] Suitability to be checked for P_d calculated in DA-3 by applying the partial factors of DA-2

the requirement of EN 1537, i.e. the greater of $\mathbf{1.25}P_0$ and $R_{a,d}$ (see the first row of proof loads for acceptance tests).

Table 8.2 shows that, in all Design Approaches, the proof load for acceptance tests is very high compared with the lock-off force and to the SLS anchorage load. These high proof loads, P_p, for acceptance tests can lead to creep of the anchors during testing because there is only a very small margin between the proof load and the anchor resistance (compare the values indicated for the proof load for suitability tests, keeping in mind that proof loads for the suitability tests are failure loads). Table 8.2 proposes a more realistic proof load (second row, in bold) obtained from

$$P_P = \max\{\mathbf{1.25}P_0, \mathbf{1.15}R_{SLS}\}$$

CHAPTER 9

Retaining structures

This chapter is concerned with the design of structures which retain ground (soil, rock or backfill) and water. The material is covered in *Section 9* of EN 1997-1 and in *Annex C* ('*Sample procedures to determine limit values of earth pressures on vertical walls*'). The structure of this chapter follows that of *Section 9*:

The following three main types of retaining structures can be distinguished: *Clause 9.1.2(1)*

- Gravity walls, in which the weight of the wall, sometimes including stabilizing masses of ground (stem walls), plays a significant role in supporting the retained material.
- Embedded walls, which are relatively thin walls of steel, reinforced concrete or timber. These walls either rely for stability solely on the earth resistance due to the passive earth pressure in front of the walls (cantilever walls) or are supported by anchorages or struts and by the resistance in the area of their toes (supported walls). The bending resistance of an embedded wall plays a significant role in the support of the retained material compared with the weight of the wall.
- Composite retaining structures, which include walls combining elements of the previous two types. Typical examples are cofferdams and reinforced earth and nailed structures.

Section 9 applies the principles of *Sections 1–4* in the design and construction of gravity and embedded walls. Composite retaining structures are not discussed, although many of the basic design principles are still applicable.

Section 9 relies on *Section 6* for the design of gravity retaining walls against bearing resistance failure, *Section 8* for the design of anchorages against pull-out failure, *Section 10* for design against hydraulic failure and *Section 11* for the design of retaining structures against overall stability failure. Certain principles of *Section 7* may also be used, where relevant, when checking the vertical stability of embedded walls.

In common with other sections of EN 1997-1, *Section 9* gives only the basic requirements for the design of retaining structures without describing or specifying particular calculation methods. To assist the designer in this task, the present chapter describes typical calculation methods for ultimate limit state (ULS) and serviceability limit state (SLS) designs (see *clauses 9.7* and *9.8*), and includes the following worked examples:

- Example 9.1: ULS design of the foundation of a gravity (stem) wall against sliding failure and bearing failure.
- Example 9.2: ULS and SLS design of an embedded wall supported by a single row of anchorages, including its design against hydraulic failure by heave. The design of the anchorage is presented in Chapter 8 (see Example 8.1).

9.1. General

Clause 9.1.1(1)P *Section 9* applies to structures which retain ground materials and water. Ground material is retained if it is kept at a slope steeper than it would eventually adopt if no structure were present. Retained ground materials exert actions (earth pressures) on retaining structures. Earth pressures on gravity and embedded walls are within the scope of *Section 9*. Earth pressures on composite retaining structures are not discussed, while pressures from granular materials stored in silos are discussed in EN 1991-4 (*Actions in Silos and Tanks*).

Clause 9.1.1(2)P

Clause 2.1(19) Retaining structures of usual size typically belong to Geotechnical Category 2. Examples are given in the note to *Clause 2.1*(*19*).

9.2. Limit states

Clause 9.2(1)P When designing a retaining structure, all possible limit states should be considered. Typical limit states include the following.

Ultimate limit states

(1) Loss of overall stability (GEO ULS). It should be demonstrated that the occurrence of an overall stability failure is sufficiently unlikely. As a minimum, limit modes of the types illustrated in *Fig. 9.1* should be considered, taking into account progressive failure and possible strength degradation (e.g. due to excess pore pressure build-up).

(2) Foundation failure of gravity and composite walls, i.e. exceedence of the sliding or the bearing resistance (GEO ULS). Examples of foundation failures are illustrated in *Fig. 9.2*. The principles of *Section 6* should be applied as appropriate, especially when designing against bearing failure of the ground below the base of a wall under loads with large eccentricities and inclinations and when designing against sliding failure. Uplift pressures under the foundation due to water seepage should also be included in the analyses.

Clause 6.5.4
Clause 6.5.3

(3) Foundation failure of gravity and composite walls by toppling (EQU ULS). EQU-type failure (i.e. loss of equilibrium of the wall considered as a rigid body) is usually limited to gravity walls founded on rock or propped at the toe.

(4) Failure of embedded walls by rotation or horizontal translation or by lack of vertical equilibrium (GEO ULS). Examples of such failures are illustrated in *Figs 9.3* and *9.4*.

(5) Failure of a structural element such as a wall, anchorage, wale or strut, including failure of the connection between such elements (STR ULS). Failure of an anchorage includes structural failure (STR ULS) and pull-out failure in the ground (GEO ULS). Examples of such failures are illustrated in *Fig. 9.5* (structural failure) and *Fig. 9.6* (geotechnical failure).

(6) Failure of a retaining structure by hydraulic heave, internal erosion or piping, unacceptable leakage of water, or transport of soil particles through or beneath the wall, all caused by excessive hydraulic gradients (HYD ULS). This condition can arise at the bottom of deep excavations when there is a significant difference between the groundwater levels at the opposite sides of the retaining wall (see also *Section 10*).

Serviceability limit states

(1) Unacceptable movement of the retaining structure, which may affect the appearance or functionality of the structure itself, or other structures or utilities influenced by these movements.

(2) Unacceptable change in the groundwater regime.

9.3. Actions, geometrical data and design situations

9.3.1. Actions

Earth pressures on the active side of retaining structures are unfavourable geotechnical actions, since their magnitude depends on the properties of the ground, namely its weight density, cohesion, angle of shearing resistance and wall–ground interface resistance (see EN 1990, clause 1.5.3.7). Groundwater pressures are also geotechnical actions. *Clause 2.4.2(4)*

Although *clause 2.4.2*(*4*) states that '*earth pressures should be considered for inclusion as actions*', without differentiating between earth pressures on the active and passive sides, the earth pressures on the passive side of embedded retaining walls in designs against GEO and STR ULSs:

- may be treated either as favourable geotechnical actions or as earth resistances in Design Approaches 1 (DA-1) and 3 (DA-3) with identical results (since the partial factors for favourable actions and resistances are unity in both cases)
- should be treated as earth resistances in Design Approach 2 (DA-2), since this approach includes a non-unit partial factor for 'earth resistance' (recommended value $\gamma_R = 1.4$, see *Table A.13*).

Earth pressures on the passive side of gravity retaining walls should be treated as favourable actions when designing against bearing failure (see *inequality* (*6.1*) and *clause 6.5.2.1*(*3*)*P*) and as resistances when designing against base sliding (see *inequality* (*6.2*) – term $R_{p,d}$). Actually, in DA-1 and DA-3 the earth pressure on the passive side of gravity retaining walls may be treated either as a favourable geotechnical action or as an earth resistance with identical results; in DA-2, however, the results are different. *Clause 6.5.2.1(3)P* *Clause 6.5.3(2)P*

In supported retaining walls, the forces from propping elements should be considered as follows (see further discussion in Chapter 8):

(1) Struts are usually modelled as kinematic constraints (fixed points), and thus the corresponding prop forces are calculated as reactions due to these constraints.
(2) In certain GEO ULS designs, where wall movements are sufficiently large to mobilize fully the resistance of the anchorages, prestressed or deadman anchorages may be modelled as permanent favourable actions with design values equal to the design resistance of the anchorages (i.e. equal to the pull-out resistance, which should be lower than the structural resistance of the tendon according to *Section 8*).
(3) In SLS and certain ULS designs, wall movements may not be sufficiently large to mobilize fully the resistance of the anchorages. Such cases may include stiff pile or diaphragm walls, where a plastic hinge in the concrete section (STR ULS) can develop at small wall deflections which may be insufficient to cause pull-out or structural collapse of the anchorages (especially if they are long and flexible). In these cases, the forces from prestressed or deadman anchorages generally result from interaction between the wall and the ground, as follows:
    (a) Forces from struts, deadman anchors (and other non-prestressed anchorages) are calculated as the reactions of springs having an appropriate stiffness (estimated from the stiffness of the tendon and the deformability of the deadman anchor as the earth resistance is mobilized).
    (b) Forces from prestressed anchorages consist of an action (equal to the known prestressing lock-off force chosen by the designer) and a spring reaction (with stiffness calculated from the stiffness of the tendon). In practice, many prestressing systems are fairly extensible, so the 'reaction' component may be neglected in comparison with the prestress action.

    Generally, the forces exerted on a retaining structure with values assumed known at the beginning of the calculation are considered as 'actions', while forces with initially unknown values, to be determined by the interaction of the retaining structure with support elements (ground springs, anchorages, struts, etc.), are considered as 'reactions'.

9.3.2. Geometrical data

Clause 9.3.2

Clause 9.3.2 deals with uncertainties in the geometrical data (excavation and water levels). In most cases, small variations in geometrical data are considered to be accommodated by the safety elements included in the calculations (mainly the characteristic values of the geometrical data and the partial factors). However, because the design of retaining structures may be very sensitive to ground and water levels (especially for embedded walls in soils with high shear strength or high angles of shearing resistance), special requirements are included in this clause, mainly for unforeseen overdig in front of the wall and groundwater levels on both sides of the wall.

Unforeseen overdig in front of the wall

Clause 9.3.2.2(2)

In ULS design calculations, where the wall stability depends on the earth resistance in front of the wall, the level of the resisting soil should be lowered below the nominally expected level by an amount Δa, which depends on the degree of control on the excavation level. With a normal degree of control, Δa should:

- for cantilever walls, be equal to 10% of the wall height above excavation level (up to a maximum of 0.5 m)
- for supported walls, be equal to 10% of the distance between the lowest support and the excavation level (up to a maximum of 0.5 m).

Smaller values of the overdig (even equal to zero) may be used when the surface level is controlled reliably during the construction of the works, while larger values may be used when the surface level is particularly uncertain.

The ground level reductions recommended in *clause 9.3.2.2*(*2*) are critical in the design, and should only be disregarded with great caution, particularly where embedded walls rely heavily on relatively short penetrations into the restraining ground. Simpson and Driscoll (1998) showed that unforeseen overdig can have a large influence on the safety against passive failure and on the calculated bending moments.

Groundwater levels in front of and behind the wall

Clause 9.3.2.3

The selection of the levels of the phreatic surfaces in front of and behind the wall must consider long-term variations of the groundwater regime and/or the ground permeability, the presence of perched or artesian aquifers and the possibility that drainage behind the wall may cease to function with time.

9.4. Design and construction considerations

Clause 9.4.1(1)P

According to *clause 9.4.1*(*1*)*P*, the design of earth retaining structures requires consideration of all relevant ULSs and SLSs.

When checking against the occurrence of a ULS, two sets of calculations should be performed for all relevant design situations:

(1) GEO ULS calculations, which consist of a set of limit equilibrium calculations to determine the proportions and geometry of the structure (the width of the base of a gravity wall, the toe penetration depth of an embedded wall, the number and location of anchorages or struts in a propped wall, etc.). These calculations should examine the horizontal and vertical force equilibrium and the moment equilibrium of the wall under appropriate lateral earth pressure on the active side (and the passive side, if relevant), other external actions (e.g. the self weight of the wall, hydraulic actions, anchor and strut forces) and resistances (e.g. the sliding resistance at the base of a gravity wall).

(2) STR ULS calculations, which consist of a set of structural design calculations to determine the size and properties of the structural sections necessary to resist the bending moments and shear forces determined from the limit equilibrium calculations.

The determination of appropriate earth pressures for ULS designs is discussed in *clause 9.5*, and the design methodology is described in *clause 9.7*. *Clause 9.5* *Clause 9.7*

SLS designs require estimates (and in some cases rigorous calculations) of the displacements of the wall and the retained ground, with the objective of ensuring that these do not exceed the serviceability requirements of influenced structures and utilities. For retaining structures without strict serviceability requirements, the geometry is usually determined by ULS design calculations and checked by SLS calculations (if relevant). For retaining structures with strict serviceability requirements, the SLS requirements often govern the design. The determination of appropriate earth pressures for use in SLS designs is discussed in *clause 9.5*, and the design methodology is described in *clause 9.8*. *Clause 9.5* *Clause 9.8*

9.5. Determination of earth pressures

The determination of the appropriate earth pressures is a major issue in the design of earth retaining structures, since earth pressures depend not only on the values of ground parameters but also on the movement and/or deflection that the wall can accommodate, due to kinematic constraints or serviceability requirements. Examples of kinematic constraints resulting in different wall movements and/or deflections, and hence different earth pressures, include walls with rigid connections to basement structures, cantilever and anchored embedded walls, gravity walls with surface foundations and walls founded on piles. An example of a serviceability requirement is the need to avoid cracking of structures founded on retained soil. The earth pressure values used in designs to EN 1997-1 are intended to give conservative estimates of the earth pressure on the active and passive sides of the wall (overestimates and underestimates, respectively) for the anticipated wall movement/deflection at the relevant limit state and design situation. *Clause 9.5.1*

According to *clause 9.5.1*(*10*), the magnitude of the appropriate earth pressures is generally different in SLS and ULS calculations. *Clause 9.5.1(10)*

In principle, if a wall is installed without any disturbance to the ground and no subsequent movement occurs, the earth pressures on both sides correspond to the at-rest conditions. *Clause 9.5.2* gives equations for estimating the at-rest earth pressure coefficient (K_0) for normally consolidated and over-consolidated soils and for ground sloping upwards from the wall. However, earth pressures corresponding to the at-rest conditions are unlikely in most retaining structures since the wall construction and excavation sequence will certainly induce movements sufficient to modify the at-rest conditions. *Clause 9.5.2*

Clauses 9.5.3 and *9.5.4* discuss the dependence of the earth pressure on wall movement. As the wall moves and/or deflects, the earth pressure on the passive side increases, and the maximum value (limiting passive earth pressure) usually occurs at the ULS. On the active side of a wall, the earth pressure generally decreases with wall movement, but the actually mobilized value of the earth pressure for use in SLS and ULS designs depends on the stiffness of the wall, the stiffness of any support elements (struts, anchorages, etc.) and the stress–strain characteristics of the ground. *Annex C* gives guidance on the magnitude of wall movement required for mobilization of the limiting active and passive earth pressures. *Clause 9.5.3* *Clause 9.5.4*

The methodology for determining the appropriate earth pressures for use in ULS and SLS designs is described below.

ULS designs

As ULS designs usually involve large wall deformations/deflections causing collapse of the system, limiting values of the earth pressures on both the active and passive sides of the wall can be estimated by the usual methods of plastic analysis using the earth pressure equations given in *Annex C*, which may be applied either in terms of total or effective stresses, as appropriate. The values of the limiting earth pressure coefficients for φ' ranging from 10 to 45° and for different wall–ground interface parameters and ground inclinations are presented as graphs in *Annex C* (based on Caquot *et al*., 1973). Account must be taken of increased pressures due to compaction and due to possible water-filled tension or shrinkage cracks. *Clause C.1(1)* *Clause 9.5.5(1)P* *Clause 9.6(5)P*

Clause 9.5.4

In walls which cannot move sufficiently to mobilize the limiting earth pressures, even in ULSs (e.g. due to kinematic constraints), ULS design calculations should be performed with intermediate earth pressures compatible with the kinematic constraints, i.e. using higher values than the limiting active pressure on the retained side and lower values than the limiting passive earth pressure on the resisting side. Appropriate earth pressures may be calculated using numerical analyses such as finite-element analyses, one-dimensional models of walls supported on linear (Winkler-type) or non-linear (elasto-plastic) springs, or other methods which take account of earth pressure redistribution, or even by using empirical earth pressure distributions, such as those described by Terzaghi and Peck (1967) and EAU (1980). The use of limiting earth pressures in such cases is usually not conservative, especially with regard to the calculated strut or anchor forces.

SLS designs

If analyses are performed which include interaction between the wall and the ground (e.g. using non-linear spring models or finite elements), *a priori* earth pressure determination is not required since the appropriate earth pressures are automatically generated through the numerical model. When such analyses are considered impractical, the serviceability requirements may be checked using simplified beam models of the wall loaded with appropriate earth pressures and supported by linear (Winkler-type) or non-linear soil springs (see Section 9.7 for more details). In such cases, appropriate earth pressures should be calculated using the fraction of the soil strength mobilized at strains compatible with the serviceability requirements.

Wall–ground friction and adhesion

Clause 9.5.1(5)

The maximum shear stress (τ) which can be mobilized at the wall–ground interface is determined from the equation

$$\tau = a + \sigma_n' \tan \delta$$

where a is the adhesion between the wall and the ground, σ_n' is the normal effective stress acting on the wall, and δ is the interface parameter between the wall and the ground (angle of shearing resistance).

Clauses 9.5.1(5) to 9.5.1(8)

Clauses 9.5.1(5) to *9.5.1*(8) recommend the following design values of the wall–ground adhesion, a, and the interface parameter, δ, for ULS designs:

- For a completely smooth wall: $\delta = 0$ and $a = 0$. For a completely rough wall, values of $a = c'$ and $\delta = \varphi'$ may be appropriate.
- For steel sheet piles in clay, immediately after driving: $\delta = 0$. An increase in this value may take place over a period of time.

Clause 9.5.1(7)

- For concrete walls cast against ground in sand or gravel: $\delta = \varphi_{cv}'$.
- For pre-cast concrete walls, or driven steel sheet pile walls, in sand or gravel: $\frac{2}{3}\varphi_{cv}'$.

where c', φ' and φ_{cv}' are, respectively, the design values of the effective cohesion, angle of shearing resistance and critical state angle of shearing resistance of the ground adjacent to the wall.

The above values of the wall–ground interaction parameters (a, δ) are maximum (limiting) values since they correspond to the maximum shear stress which can be mobilized at the wall–ground interface. Lower values of the interaction parameters may actually be mobilized, depending on the vertical component of the ground displacement relative to the wall (on either of its two sides) and the requirement to ensure vertical equilibrium of the wall. This means that different values of the interaction parameters may be required on either side of the wall to achieve vertical equilibrium. For example, in high embedded walls with multiple levels of prestressed anchorages (especially when the anchorages are strongly inclined towards the vertical), use of the maximum value of the δ parameter on the active side, as recommended above, may have the consequence that vertical equilibrium of the wall

cannot be satisfied. In such cases, the actual value of d should not be assumed, but should be calculated from vertical equilibrium of the wall; this value is used subsequently in horizontal equilibrium calculations.

The vertical equilibrium requirement implies that the wall friction on the passive side (acting upwards) may not exceed the wall friction on the active side (acting downwards), taking into account any vertical forces on the wall (e.g. the vertical component of anchor forces). This requirement results in a reduction of the assumed maximum (limiting) friction on the passive side or on the active side of the wall, depending on the need to reduce the vertical upward force or the vertical downward force.

Clause 9.5.5 discusses the determination of earth pressures on walls with compacted backfill. A method for calculating earth pressures due to compaction was published by Ingold (1979). Compaction pressures should only be included in STR ULS design calculations (structural design of the wall) and in SLS design calculations. In GEO ULS design calculations, compaction pressures should not be considered since they are normally relieved with relatively little horizontal movement of the wall. *Clause 9.5.5*

9.6. Water pressures

The determination of water pressures on retaining structures is very important since their magnitude often exceeds that of the earth pressures. If the equilibrium level of the water table is well defined and measures are taken to prevent variations during heavy rain or flooding, the design water pressures can be calculated from the equilibrium water table, making due allowance for possible seasonal variations; otherwise, the most adverse water pressure conditions should be used in design. Where a difference in water pressures is likely to exist on opposite sides of the wall, account should be taken of seepage flow occurring around the structure. A simplified method for calculating the water pressures on a wall due to steady state seepage flow around it is based on the assumption of uniform head loss along a flow path around the wall in the relatively less permeable ground layer (see Example 9.2).

Since the actions derived from water pressures are considered as geotechnical actions, the appropriate partial factors for actions are applied to them. This is particularly significant in DA-3, where the partial factors on structural and geotechnical actions are different. The partial factors for actions are applied to the net water pressure acting on the wall, i.e. on the difference between the water pressures acting on the two sides of the wall.

9.7. Ultimate limit state design

The provisions in *clause 9.7* concern both permanent and temporary retaining structures. According to *clause 2.4.7.1(2)P*, the partial factors for use in ULS designs of retaining structures for persistent and transient situations should be those defined in *Annex A*. These partial factors are included in the following tables: *Clause 9.7* *Clause 2.4.7.1(2)P*

- *Table A.3* – partial factors on actions or the effects of actions
- *Table A.4* – partial factors on soil parameters
- *Table A.12* – partial resistance factors for pre-stressed anchorages
- *Table A.13* – partial resistance factors for retaining structures.

Table 9.1 summarizes the values of the partial factors recommended in *Annex A*.

ULS designs of retaining structures for persistent and transient design situations are carried out using appropriate earth pressures (see *Section 9.5*) and ensuring that the design values of the effects of actions do not exceed the corresponding design values of the resistances: $E_d \leq R_d$. Either of the three Design Approaches (DA) described in *clause 2.4.7.3.4* may be used. *Clause 2.4.7.3.4*

Table 9.1.
(a) Recommended values of the partial factors on actions and effects of actions (persistent and transient situations) according to *Annex A*

Design Approach (sets of partial factors)	Partial factors on actions	
	Unfavourable permanent, γ_G[a]	Unfavourable variable, γ_Q[b]
DA-1 Combination 1 (*A1* '+' *M1* '+' *R1*)	1.35	1.5
DA-1 Combination 2 (*A2* '+' *M2* '+' *R1*)	1.0	1.3
DA-2 (*A1* '+' *M1* '+' *R2*)	1.35	1.5
DA-3 (*A2* or *A1* '+' *M2* '+' *R3*)		
Geotechnical action[c]	1.0	1.3
Structural action[d]	1.35	1.5

[a] For favourable permanent action: $\gamma_G = 1.0$
[b] For favourable variable action: $\gamma_Q = 0.0$
[c] Geotechnical action: action transmitted to the wall through the ground
[d] Structural action: action from a supported structure applied directly to the wall

(b) Recommended values of the partial factors on soil parameters and resistances (persistent and transient situations) according to *Annex A*

Design Approach (sets of partial factors)	Soil parameters, γ_M				Resistances	
	Weight density	tan φ': γ_φ	c': γ_c	c_u: γ_{cu}	Passive, $\gamma_{R,e}$	Anchor, γ_a
DA-1 Combination 1 (*A1* '+' *M1* '+' *R1*)	1.0	1.0	1.0	1.0	1.0	1.1
DA-1 Combination 2 (*A2* '+' *M2* '+' *R1*)	1.0	1.25	1.25	1.4	1.0	1.1
DA-2 (*A1* '+' *M1* '+' *R2*)	1.0	1.0	1.0	1.0	1.4	1.1
DA-3 (*A2* or *A1* '+' *M2* '+' *R3*)	1.0	1.25	1.25	1.4	1.0	1.0

The design values of actions are calculated as follows (see also Chapter 2):

(1) In DA-1 (Combination 1) and DA-2, by applying appropriate partial factors on:
   (a) the characteristic values of the actions, i.e. $F_d = \gamma_F F_k$, for non-geotechnical actions (e.g. the self-weight of the wall)
   (b) the values of the actions calculated using the characteristic values of the ground parameters, i.e. $F_d = \gamma_F F(X_k)$, for geotechnical actions (e.g. earth pressure).

   Alternatively, design values of actions may be calculated by applying appropriate partial factors on the calculated effects of actions, i.e. $E_d = \gamma_E E(F_k, X_k, a_d)$, for example on the bending moments (M) in the wall, which are calculated using the characteristic actions and ground parameters.
(2) In DA-1 (Combination 2) and DA-3, design values of non-geotechnical actions are calculated from the equation $F_d = \gamma_F F_k$ while design values of geotechnical actions are calculated using design (factored) values of ground parameters, i.e. $F_d = \gamma_F F(X_k/\gamma_M)$. In both cases, $\gamma_F = 1.0$, except for unfavourable variable actions (where the recommended value is $\gamma_F = 1.30$ – see *Table A.3*).

Clause 2.4.7.3.2(2) According to *clause 2.4.7.3.2(2)*, in some design situations the application of partial factors to geotechnical actions (i.e. earth pressures on the 'active' side of walls and net water pressures) may lead to design values of the effects of the actions which are unreasonable or even physically impossible. A typical example is the calculation of the design value of the water pressure on the 'active' side of a wall with a high groundwater table (near the ground

surface), where the application of the relevant partial factor for actions ($\gamma_F = 1.35$ in persistent and transient situations) may lead to unrealistic design water pressures corresponding to groundwater levels above the crest of the wall. In these situations, the partial factors for actions may be applied directly on the effects of the actions derived from the characteristic values of the actions, i.e. using the equation

$$E_d = \gamma_E E(F_k, X_k, a_d)$$

For example, the appropriate partial factor for actions (γ_F) may be applied directly to the shear force and to the bending moment at a critical section of a cantilever retaining wall, and to other key design quantities (effects of actions), where these quantities have been calculated using characteristic values of the actions and ground parameters (active earth pressures, water pressures, surcharges, etc.).

ULS design of gravity walls

A list of the ULSs that need to be considered in the case of gravity walls is provided in *clause 9.2*, with the most important being bearing and sliding failure of the foundation (GEO ULS) and exceedence of the structural resistance in critical sections of stem walls (STR ULS). *Clause 9.2* *Clause 9.7.3*

The bases of gravity walls are usually spread foundations, often subjected to markedly eccentric loads. EN 1997-1 includes no 'middle third rule' to limit highly eccentric loads on the foundations of gravity walls, but requires design against bearing failure under eccentric loading (see *clause 6.5.4*). In walls founded below the water table, uplift forces on the foundations due to water pressure should be included in the design. *Clause 6.5.4*

In stem walls with significant heels, the earth pressure is usually assumed to act on the 'virtual back' of the wall (i.e. a vertical plane from the rear extremity of the heel up to the ground surface), provided that the length of the heel is large enough to permit the development of the conjugate (i.e. symmetrical with respect to the vertical) 'failure surface' within the soil mass above the heel. In such cases, it can be shown that the active earth pressure is parallel to the ground surface behind the wall regardless of the angle of frictional resistance of the ground (e.g. if the ground surface is horizontal the active earth pressure is also horizontal).

The passive earth pressure force (P_p) acting on the resisting side of the wall should be considered as an earth resistance (with partial factors from *Table A.13*) when designing against base sliding, and as a favourable geotechnical action (with partial factors from *Table A.3*) when designing against bearing failure of the foundation (see discussion in Section 9.3.1).

Example 9.1 presents the methodology for the ULS design of a stem gravity wall according to the three Design Approaches.

ULS design of embedded walls

The aim in the ULS design of embedded walls is to determine the minimum wall penetration required to prevent rotational failure and ensure vertical equilibrium and, for a given wall penetration, to determine the distribution of the effects of the actions (e.g. bending moments and shear forces) along the height of the wall and the magnitude of the support reactions (anchor or strut forces), in the case of supported walls. *Clause 9.7.4* *Clause 9.7.5*

The ULS design of embedded walls is usually more complicated than the design of other geotechnical structures, not only because embedded walls require an interaction analysis but also mainly because the fundamental assumption of any geotechnical ULS design (i.e. a limit state occurring in the ground) usually cannot be satisfied simultaneously at all locations in the ground affecting the wall, due to the kinematic constraints imposed at the toe of the wall and at the positions of the supports. Consequently, the 'simple' ULS assumption that limiting earth pressures develop simultaneously on both the active and passive sides of the wall is not always realistic and cannot be used in walls with long toe penetrations and walls supported at multiple levels. In these cases, calculation models should include wall–ground interaction for the analysis of earth pressure development, thus complicating significantly

the application of the partial factors in the three Design Approaches (mainly because of the interplay between the stiffness-controlled wall–ground interaction and the strength-controlled earth pressures caused by the interaction). Such calculation models are discussed below.

In general, depending on the magnitude of toe penetration, embedded walls can be designed for any condition in the range between 'free'- and 'fixed'-earth support at their toes. In the free-earth support condition, wall penetration is the minimum required to ensure toe stability, with forward movement and rotation of the toe permitted to a degree sufficient to mobilize the limiting passive earth pressure on the resisting side of the wall. In the fixed-earth support condition, wall penetration is sufficiently longer than the minimum to ensure complete toe fixation (zero forward movement and zero rotation). Walls designed for free-earth support conditions obviously have the shortest length, but suffer larger bending moments, anchor forces and deflections compared to similar walls designed for fixed-earth support conditions.

The ULS design of embedded walls usually consists of the following steps:

Clause 9.3.2.2

(1) The geometrical characteristics of the model are established, taking into account an unforeseen overdig at the toe of the excavation, in accordance with *clause 9.3.2.2*.
(2) In cases with a hydraulic head difference between the two sides of the wall, the pore pressure distributions on the active and passive sides are determined as discussed in Section 9.6. Their difference is equal to the net water pressure acting on the wall.
(3) GEO ULS analyses, usually involving horizontal force and moment equilibrium, are normally used to determine the minimum wall penetration. Vertical equilibrium is normally used to determine the appropriate values of the wall–ground interface parameter (δ) on the active and passive sides of the wall. In supported walls, the free-earth support condition provides the minimum wall penetration satisfying the ULS requirement of rotational stability, i.e. adequate safety against failure in the passive zone.
(4) The wall penetration may be increased beyond the required minimum, in order to reduce the bending moments or certain support reactions, or to reduce the movement in the supported ground, or for hydraulic reasons (e.g. to reduce water seepage or prevent hydraulic heave/uplift). In such cases, the above analyses should be repeated using the new wall penetration depth and appropriate earth pressures (usually different from the limiting values) compatible with the kinematic constraints imposed at the toe of the wall and at the positions of the supports. Calculation models for these analyses are recommended below.
(5) The structural design of the wall and the design of the anchorages are performed using the design values of the effects of the actions (bending moments, shear forces) and the anchor forces calculated using the previous analyses.
(6) Other ULSs are analysed as relevant. Such limit states may include overall stability failure, stability of anchorages at a lower failure plane (e.g. using a Kranz-type method as described in EAU (1996)), vertical failure of the wall, hydraulic failure, etc. These analyses may result in longer wall penetration, higher capacity of the wall and the support elements and/or increased length of the anchorage system.

The ULS design of embedded walls can be performed with several types of calculation model, including:

- assumed earth pressure models, such as limit equilibrium models (LEMs) and models with other assumed earth pressures (e.g. the Terzaghi and Peck earth pressures)
- wall–ground interaction models, such as models of beams on ground spring supports and finite-element models.

Each type of model involves different assumptions concerning the magnitude of the earth pressures acting on the wall, thus limiting its applicability to those situations where these assumptions are fulfilled. The following subsections describe the application of the three Design Approaches in the ULS design of embedded walls for persistent and transient

situations, using the above types of models. It is pointed out that wall–ground interaction models can also be used in SLS design calculations.

Limit equilibrium models

LEMs assume that the limiting earth pressures develop along the full height of the wall (limiting active pressure on the back of the wall and limiting passive earth pressure on the front, i.e. resisting, side). Because of this assumption, LEMs can be used to determine the minimum wall penetration required for rotational stability in cantilever walls and in walls supported at a single level. These analyses also provide the design values of all the effects of the actions on the wall (bending moments and shear forces) and the anchorage forces for this minimum wall penetration. For walls with longer penetrations than the above minimum value and for walls with multiple support levels, LEMs are not appropriate because, in these cases, the mobilized earth pressures (on the active or the resisting side) can deviate significantly from the limiting values.

ULS calculations with LEMs in persistent and transient situations are performed using design values of the limiting earth pressures, which are calculated as follows in each of the three Design Approaches:

- In DA-1 Combination 2 and in DA-3, the design values of the active and passive earth pressures are obtained using the partial factors for soil parameters γ_M from *Table A.4* (set *M2*).
- In DA-2 and in DA-1 Combination 1 the design value of the active earth pressure is obtained by multiplying the characteristic values of the active pressure components by the appropriate partial factor for actions (γ_G or γ_Q from *Table A.3*, set *A1*). The design value of the passive earth pressure is obtained by dividing the characteristic value by the partial factor for earth resistance $\gamma_{R,e}$ from *Table A.13*: set *R1* for DA-1 Combination 1 (recommended value: 1.0) and set *R2* for DA-2 (recommended value: 1.4).

Figure 9.1 illustrates the implementation of LEMs in the case of a simply supported wall loaded with active earth pressure (σ_a), passive earth pressure (σ_p) and net water pressure (σ_w).

In DA-2, all partial factors are applied at the very end of the calculations (see p. 35), i.e. the total driving action (active earth pressure force plus the net water pressure force minus any support reaction) is multiplied by the partial factor on actions, and the result is compared with the resultant resistance (passive earth pressure force) divided by the partial factor on resistances, i.e.

$$F_k\gamma_F \leq R_k/\gamma_{Re}$$

Implementation of this procedure is complicated by the fact that the various components of the driving actions (favourable, unfavourable, permanent and variable) require different values of the partial factor for actions (γ_F), and separation of the various components of the driving actions is complicated (and results in inaccuracies in non-linear problems).

If the behaviour of the wall is linear (i.e. plastic hinges do not develop), DA-2 can be applied using the following equivalent alternative procedure, called DA-2* for convenience:

- Actions on the active side of the wall (active earth pressure, net water pressure and any other permanent actions) enter the calculations with values equal to their characteristic values. Surface variable loads enter the calculation with the value $q = q_k(\gamma_Q/\gamma_G)$, where q_k is the characteristic value (in order to account for the difference between the partial factor of variable and permanent actions).
- Earth resistances on the passive side of the wall enter the calculations with their characteristic value factored by $1/(\gamma_{Re}\gamma_G)$, in order to account for the partial factor of earth resistance (γ_{Re}) and the partial factor of permanent actions (γ_G) missing from the actions on the active side.

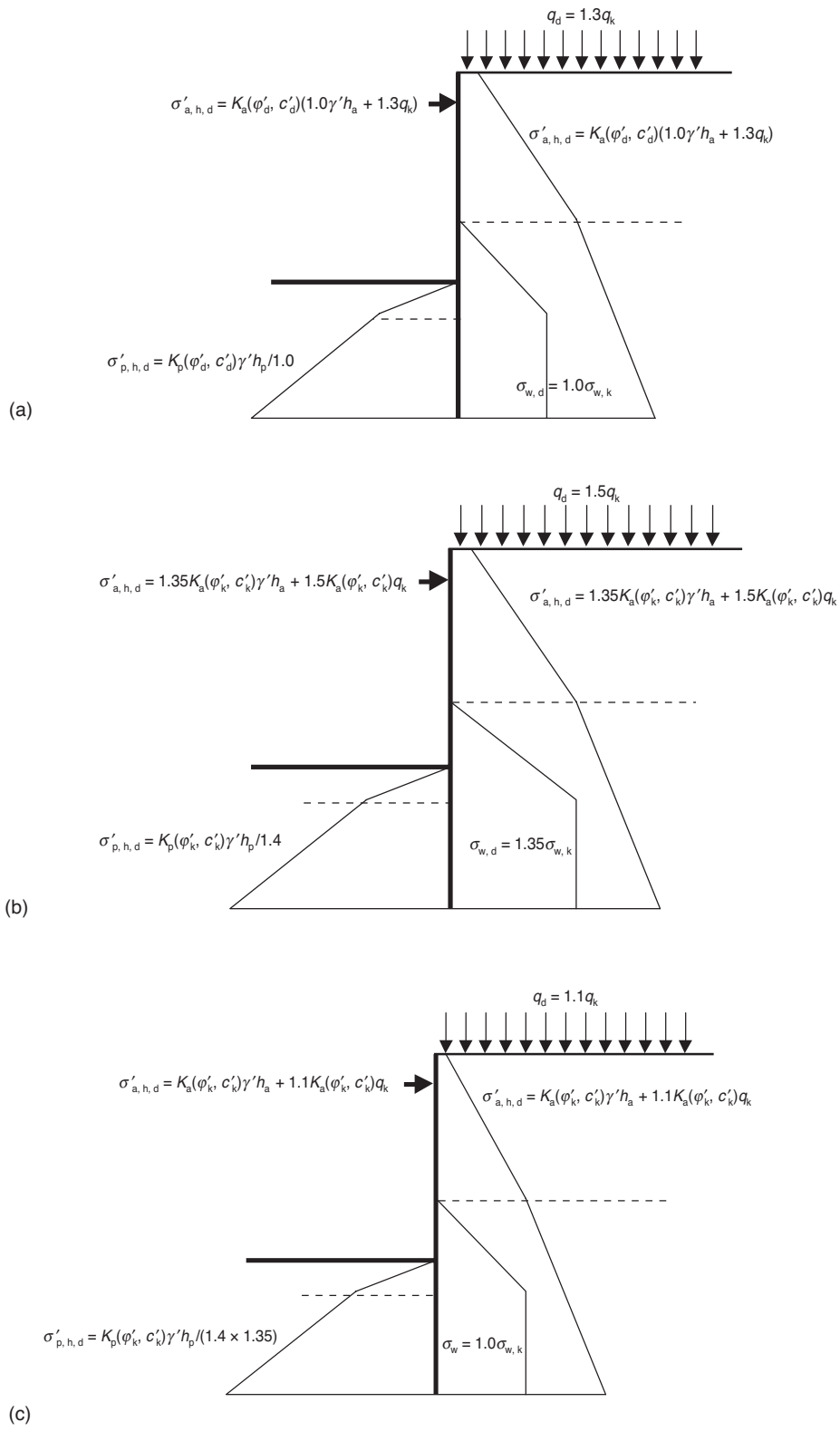

Fig. 9.1. (a) Application of an LEM in DA-1 Combination 2 and in DA-3. (b) Application of an LEM in DA-2; the same model may be used in DA-1 Combination 1 with $\gamma_{R,e} = 1$ (instead of 1.4). (c) Application of an LEM using the equivalent alternative procedure DA-2* described in the text

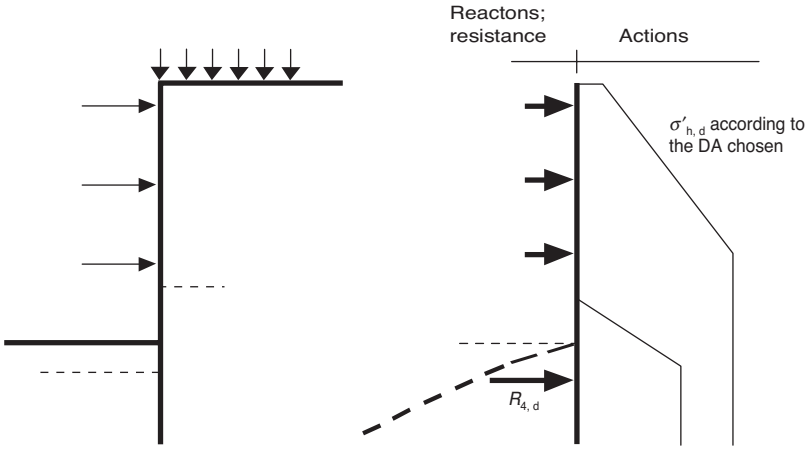

Fig. 9.2. Beam model of a multi-supported wall with assumed earth pressure loads

- Equilibrium calculations are performed as for any other Design Approach giving the minimum wall penetration, the effects of the actions (e.g. bending moments) and the support reaction. The design values of the effects of the actions and the support reaction are obtained by multiplying the calculated values by the partial factor γ_G (since this factor was not applied to the actions on the active side).

If the behaviour of the wall is linear, DA-2* gives exactly the same results as DA-2.

Figure 9.1c illustrates the implementation of LEMs with DA-2* (as described above) in the case of a simply supported wall.

Beam models with assumed earth pressure loads

In beam models with assumed earth pressure loads, the wall is modelled as a beam resting on supports at the locations of the anchors (or struts) and at the point of application of the resultant earth resistance on the passive side. The beam is loaded by the net water pressure and the *a priori* known earth pressure distributions on the active side (e.g. the Terzaghi and Peck earth pressures for multi-strutted walls). Usually, the shape of the earth pressure distribution on the resisting side of the wall is also assumed in order to estimate the location of the point of application of the resultant earth resistance. For a given wall penetration, equilibrium calculations provide the design values of the effects of the actions on the wall, the support reactions and the earth resistance on the passive side required for equilibrium. The sufficiency of the wall penetration is ensured by checking that the design value of the earth resistance on the passive side calculated from equilibrium does not exceed the design value of the limiting earth resistance (limiting passive earth pressure force). LEMs belong to the class of assumed earth pressure models, since in LEMs the earth pressures are known *a priori* (they are equal to the limiting values).

Figure 9.2 illustrates a beam model of a multi-supported wall with assumed earth pressure loads. In beam models with assumed earth pressurs, the three Design Approaches are applied exactly in the same way as LEMs (see above).

The accuracy of beam models with assumed earth pressures depends on the accuracy of the assumed earth pressure distributions. As these pressure distributions strongly depend on the lateral deflection of the wall (i.e. on the stiffness of the ground, the wall and the supports and on the detailed construction sequence), more sophisticated models including wall–ground interaction are usually more appropriate. Such models, based on ground springs and on finite elements, are described below.

Beam models on ground spring supports (spring models)

In spring models, the wall is modelled as a one-dimensional beam. Wall–ground interaction is treated in a simplified way, namely by independent non-linear spring supports arranged on

the active and passive sides of the wall, either continuously distributed or lumped at specific locations along the wall. Spring models are appropriate in cases where wall–ground interaction effects are important, i.e. for multi-propped walls, for walls with lengths exceeding the minimum required for toe stability, for very stiff walls retaining overconsolidated soil and/or embedded in very stiff ground (e.g. rock), and for walls supported by very stiff elements (struts or anchorages) installed early and highly prestressed (see *Fig. 9.5*). Spring models are also appropriate in the case of staged excavations and in cases involving gradual (multi-stage) prestressing of anchorages.

The stress–strain behaviour of the springs simulates as closely as possible the reaction of the ground as it is displaced from the initial K_0 condition to the limiting condition (active or passive). The ground springs yield at pressures corresponding to the limiting active and passive earth pressures, and their pre-yield stiffness can be either constant or multi-linear. In this way, the earth pressures mobilized on the active and resisting sides of the wall are calculated from the ground spring reactions. The mobilized pressures are also compatible with the wall deflections, which are controlled by the stiffness of the wall and its supports.

Spring models can be used with the three Eurocode Design Approaches as follows:

(1) **DA-1 Combination 2 and DA-3**. The design values of the ground strength parameters (obtained via the partial factors γ_M from *Table A.4*, set *M2*, are used to determine the yield (limiting) pressures of the ground springs. Thus, the calculations ensure that the mobilized earth resistance on the passive side of the wall (i.e. the sum of the calculated ground spring reactions on the passive side of the wall) does not exceed the limiting earth resistance. The calculations provide directly the design values of all the effects of the actions on the wall (e.g. the design values of the support reactions). If the behaviour of the wall is taken as elasto-plastic, the yield value of the wall bending moment entering the calculations (M_u) should be taken as being equal to the design value of the wall ultimate (plastic) moment of resistance, i.e. $M_u = M_{u,d} = M_{u,k}/\gamma_M$, where $M_{u,k}$ is the characteristic moment of resistance of the wall section and γ_M is the partial factor for the wall material.

(2) **DA-2 and DA-1 Combination 1**. DA-2 and DA-1 Combination 1 normally involve factoring the actions (earth and net water pressures) on the active side of the wall with partial factors greater than unity (γ_G and γ_Q from *Table A.3*, set *A1*). However, such factoring is incompatible with wall–ground interaction analyses as it introduces artificial yielding in the ground springs, resulting in unrealistic stress redistributions along the wall. Thus, the following procedure can be adopted:

   (a) All ground parameters, net water pressures and other permanent actions enter the calculations with values equal to their characteristic values. Surface variable loads enter the calculations with a value $q = q_k(\gamma_Q/\gamma_G)$, where q_k is the characteristic value, in order to account for the difference between the partial factors on variable and permanent actions. If the behaviour of the wall is taken as elasto-plastic, the yield value of the wall bending moment entering the calculations (M_u) should be taken as being equal to the design value of the wall ultimate (plastic) moment of resistance divided by γ_G, i.e.

   $$M_u = M_{u,d}/\gamma_G = M_{u,k}/(\gamma_M\gamma_G)$$

   (b) Equilibrium calculations provide 'unfactored' values of the support reactions, effects of actions (e.g. bending moments) and the mobilized earth resistance (R_{mob}) on the passive side of the wall. The design values of these quantities are obtained by multiplying the calculated values by the partial factor on unfavourable permanent actions (γ_G from *Table A.3*, set *A1*, recommended value: 1.35). For example, the design value of the mobilized earth resistance is

   $$R_{mob,d} = \gamma_G R_{mob}$$

(c) The stability of the base of the wall against rotational failure is checked by ensuring that the calculated design value of the mobilized earth resistance ($R_{mob,\,d}$) does not exceed the design value of the limiting earth resistance ($R_{p,\,d}$), i.e.

$$R_{mob,\,d} \leq R_{p,\,d}$$

$$\Rightarrow \gamma_G R_{mob} \leq R_{p,\,k}/\gamma_{R,\,e}$$

$$\Rightarrow R_{mob} \leq R_{p,\,k}/\gamma_G \gamma_{R,\,e}$$

where the partial factor on earth resistance $\gamma_{R,\,e}$ is obtained from *Table A.13*, set *R1* for DA-1 Combination 1 (recommended value: 1.0) and set *R2* for DA-2 (recommended value: 1.4).

In DA-2, this method ensures that the actually mobilized earth resistance (R_{mob}) does not exceed about 50% of the limiting earth resistance ($R_{p,\,k}$), since

$$1/\gamma_G \gamma_{R,\,e} = 1/(\mathbf{1.35} \times 1.4) = 1/1.89 = 0.53$$

i.e. it ensures a minimum overall factor of safety (OFS) ≥ 1.89 against rotational failure of the base of the wall. In DA-1 Combination 1, the available OFS is lower (≥ 1.35), but Combination 2 is usually more critical with regard to safety against rotational failure of the base of the wall (thus providing a larger OFS).

In addition to the limiting values of the earth pressures, spring models also require the coefficient of earth pressure at rest (K_0), as it affects the initial loading of the wall prior to any deflection, and other parameters such as the ground spring stiffness, the bending stiffness (*EI*) of the wall and the axial stiffness of the supports (struts or anchorages). Empirical rules have been established to derive the ground spring stiffness from ground test results (pressuremeter and cone penetrometer tests). It is pointed out that the information included in *Annex C2* is related to the movements required to mobilize the limiting earth pressures over the total length of the wall and is not appropriate for estimating the ground stiffness in spring models.

As ground displacements are crucial in ULS calculations with spring models, important interaction parameters are the initial ground stresses, the stress–strain relationship of the ground from the initial K_0 condition up to the limiting pressures (active and passive), the stiffness of the wall and its supports and, finally, the detailed construction sequence. Although EN 1997-1 does not provide guidance on the design values of these parameters, it is recommended that the design values of the ground spring stiffness, the K_0 coefficient and other non-strength-related model parameters are set equal to their characteristic values. Usually, a safe design is obtained with a low characteristic value of the spring stiffness and a high characteristic value of K_0. However, as it is often difficult to obtain reliable values of the spring stiffness and the K_0 coefficient, it is recommended that the sensitivity of the design is checked with regard to variations of these parameters. It is also recommended that, where relevant, the design is checked with upper and lower values of the wall and support stiffnesses.

Finite-element models

Finite-element models include wall–ground interaction by treating the ground as a continuum in contact with the wall and by imposing displacement compatibility at the wall–ground interface. Thus, finite-element models are appropriate in the design of any type of embedded wall, but they are especially useful in cases where wall–ground interaction effects are important, i.e. in those cases where spring models are also appropriate (see above).

The advantage of finite-element models compared with spring models is that finite-element models avoid the interpretation of the ground stress–strain curve in the pressure–displacement relationship (as required by the spring models), thus eliminating the significant uncertainty involved in such interpretation.

Finite-element models can be used with the three Eurocode Design Approaches as follows:

(1) **DA-1 Combination 2 and DA-3**. The procedure described above to determine the wall length when using the spring models for DA-1 Combination 1 and DA-2 with design values of the ground strength parameters can also be used with finite-element models. Alternatively, numerical calculations can be performed using the characteristic values of the ground strength parameters. In this case, when ULS requirements need to be checked (i.e. the adequacy of the available margin of safety against toe failure at each excavation stage), the values of the ground strength parameters are gradually reduced down to their design values (obtained via the partial factors γ_M from *Table A.4*, set *M2*) while ensuring that model stability is not compromised. The method of strength reduction is discussed in more detail in Chapter 11, on overall stability.

Both procedures can provide the design values of the effects of the actions on the wall and the support reactions, but the second procedure is preferable when the ground stress–strain relationship depends strongly on the loading history.

(2) **DA-2 and DA-1 Combination 1**. The procedure for DA-2 and DA-1 Combination 1 described for the corresponding spring models can be used (see above), i.e. all ground parameters, net water pressures and other permanent actions enter the calculations with values equal to their characteristic values.

Specific comments on the application of DA-1 in all calculation models

In DA-1, which requires two calculations, the minimum wall penetration required for toe stability is usually governed by the Combination 2 analysis. It is therefore recommended that initially, in the first calculation, the Combination 2 analysis is performed to determine the required penetration length and then, in the second calculation, the Combination 1 analysis is performed to check that this length is in fact larger than the minimum length required by the Combination 1 analysis. A spring (or finite-element) model is more appropriate for this second calculation (Combination 1 analysis), because the wall penetration calculated using Combination 2 is most probably longer than the Combination 1 requirement, and thus the mobilized earth pressure on the resisting side of the wall in the Combination 1 analysis will be smaller than the limiting value. The wall moment of resistance in the second calculation may be deduced from the maximum bending moment obtained in the first calculation. The design of the wall section and the anchorage in DA-1 should be performed using the larger of the maximum design bending moments and anchor forces obtained from the two combinations using the same design length of the wall, i.e. the longer length obtained by the two previous analyses.

Example 9.2 presents the methodology for the ULS design of an embedded wall supported with a single row of anchorages, using the three Design Approaches. This example also provides calculations for checking against base failure by hydraulic heave.

9.8. Serviceability limit state design

9.8.1. General

Clause 9.8.1(5) Under serviceability conditions, wall movements are usually not sufficiently large to mobilize the limiting earth pressures. This is especially relevant where the supported soil is overconsolidated or heavily compacted, the retaining structure and its foundation are fairly rigid (e.g. gravity walls founded on piles), or the displacement tolerance of the structures behind the wall is small. In these circumstances, the appropriate earth pressures are usually larger than the limiting earth pressures on the 'active' side of the wall and lower than the limiting earth pressures on the passive side of the wall. The determination of the appropriate earth pressures for SLS design calculations is discussed in Section 9.5.

Clause 2.4.8(2) In SLS design calculations, as stated *clause 2.4.8*(*2*), the values of the partial factors should normally be taken equal to unity so that the design values of all actions, resistances and

ground parameters are equal to their characteristic values. Hence, the design values of earth pressures for SLS calculations should normally be calculated using design values of all ground parameters equal to their characteristic values.

9.8.2. Displacements

EN 1997-1 requires the following approach when performing SLS designs of retaining structures: *Clause 9.8.2*

(1) Determination of limiting acceptable values for the displacements of the wall and any supported structures and services. *Clause 9.8.2(1)P*
(2) Cautious estimate of the wall deflection and displacements and their effects on supported structures and services on the basis of comparable experience. *Clause 9.8.2(2)P*
(3) More detailed investigation, including rigorous displacement calculations, should be undertaken in any of the following situations: *Clause 9.8.2(3)P* *Clause 9.8.2(5)P*
   (a) the initial cautious estimate exceeds the allowable limiting values
   (b) comparable experience is not well established
   (c) nearby structures and services are unusually sensitive to displacement.

Clause 9.8.2(*6*) recommends that displacement calculations are considered in the case of walls retaining more than 6 m of cohesive soil of low plasticity or 3 m of high-plasticity soils or in cases where the wall is supported by soft clay within its height or beneath its base. *Clause 9.8.2(6)*

Wall deflections and ground displacements under SLS conditions can be calculated using numerical analyses (e.g. finite-element models) of the ground–structure system, including the complete wall construction and, where relevant, the support installation sequence. The main uncertainty in these analyses is the estimation of the appropriate ground stiffness, i.e. a stiffness compatible with the level of strain, mode of deformation, ground anisotropy, etc. If such analyses are considered impractical, deflections of embedded walls can also be calculated by modelling the structure as a beam supported on elasto-plastic Winkler-type springs, as discussed in ULS design (see Section 9.7). One of the limitations of these models is that displacements in the supported ground (and thus in influenced structures and utilities) are not calculated but need to be assessed indirectly.

Overdig is usually not introduced in SLS design. The characteristic resistance and ground parameter values should be selected as cautious estimates of the values governing the serviceability state considered. According to clause 4.2(8) of EN 1990 (*Basis of Structural Design*), characteristic values of stiffness parameters are equal to their mean values. This is accepted for the structural stiffness but is over-ridden for the ground stiffness by EN 1997-1, which requires that the characteristic value of the ground stiffness is selected as a cautious estimate of the mean value (and not the mean value). Finally, it is pointed out that since ground stiffness depends on strain, the value of ground stiffness used in SLS design calculations may be different from the corresponding 'elastic' value used in ULS design calculations performed via finite elements (where strains are usually larger than those in SLS designs). *Clause 2.4.5.2(2)P*

Example 9.2 presents the methodology for the SLS design of an embedded wall supported by a single row of anchorages.

Example 9.1: ULS design of a stem (gravity) wall

This example presents the ULS design of a concrete stem (gravity) wall according to the three Design Approaches of EN 1997-1, and compares the results with those of the conventional OFS method. Figure 9.3 shows the wall supporting a cohesionless medium-dense to dense gravelly sand sloping at an angle $\beta = 20°$. The ground beneath the wall base and the ground in front of the wall base providing earth resistance have the same properties as the retained ground. The underside of the wall base is considered

rough (concrete cast against the ground), while the vertical face of the wall base on the passive side is considered to be smooth (concrete cast against a smooth formwork). For simplicity, hydraulic effects are irrelevant by assuming that the water table is well below the zone of influence of the wall.

The following parameters are used in the design:

- Geometrical data (see Fig. 9.3):
  - Wall stem height: $h = 6$ m.
  - Toe embedment depth: $h_1 = 0.80$ m. This includes some accidental overdig in accordance with *clause 9.3.2.2*. An overdig less than 10% of h may be justified in this case, since the wall relies only slightly on the earth resistance for stability and the ground level on the passive side is usually well controlled.
  - Height of base: $h_2 = 0.80$ m.
  - Width of stem: top, $b_1 = 0.50$ m; bottom, $b_3 = 0.70$ m.
  - Width of toe: $b_2 = 0.95$ m.
- Characteristic values of material parameters and actions:
  - Characteristic angle of shearing resistance of the backfill and the ground (beneath the wall base and on the passive side): $\varphi'_k = 32°$. For simplicity, it is assumed that the peak strength angle is equal to the critical state angle.
  - Weight density of the backfill and ground: $\gamma_k = 20$ kN/m^3.
  - Wall–ground interface parameter (friction angle) on the underside of the wall base (assumed rough; concrete cast on the ground; see *clause 6.5.3(10)*: $\delta_k = \varphi'_k = 32°$.
  - Wall–ground interface parameter (friction angle) on the passive side (assumed smooth; concrete cast against a smooth side-wall formwork): $\delta_{pk} = 20°$.
  - Weight density of the concrete: $\gamma_{bk} = 24$ kN/m^3.
  - Surcharge at ground surface (variable action): $q_k = 10$ kPa.

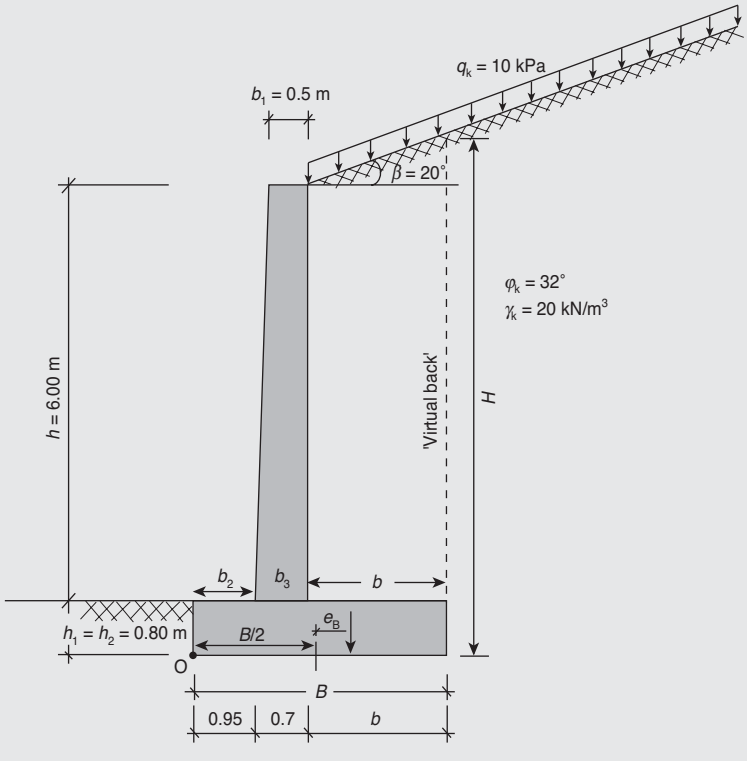

Fig. 9.3. Geometrical data for a concrete stem (gravity) wall

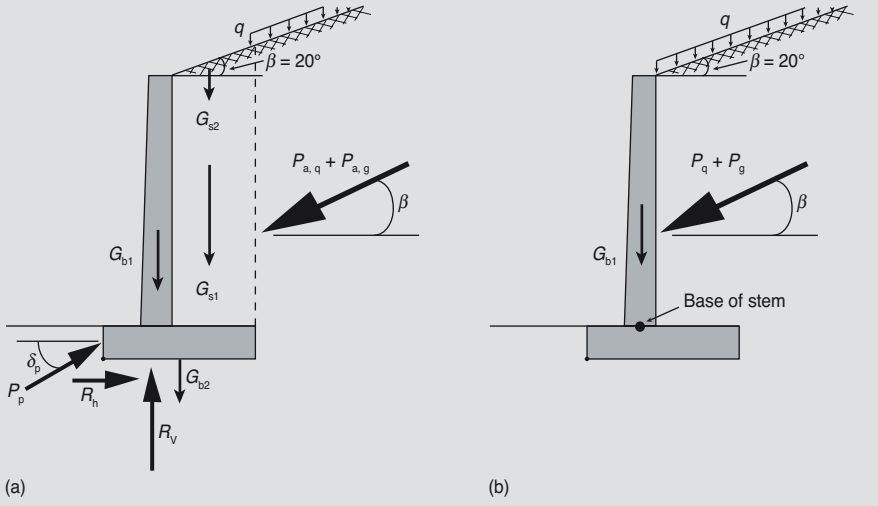

Fig. 9.4. Actions and resistances in (a) GEO and (b) STR ULSs

The objective of the design is to determine the required minimum width, b, of the heel for stability and calculate the bending moments and shear forces at critical sections of the wall. The minimum width of the back heel is determined by checking the GEO ULSs in the ground, namely exceedence of the sliding resistance on the wall base and bearing failure of the foundation. The structural design of the wall (calculation of bending moments and shear forces in critical sections) is performed by checking STR ULSs at the bottom of the stem only; a similar procedure can be used for the design of other critical sections (see Fig. 9.4).

For conciseness, an SLS design check has not been carried out in this example. Serviceability requirements relate to the displacements of the wall and the retained ground and to the performance of the concrete sections (especially with regard to cracking). The SLS design procedure is described in Section 9.8.2. It involves first making a cautious estimate of the wall deflection and the resulting ground displacements on the basis of comparable experience, and, if the limiting values are exceeded, performing a more detailed analysis using rigorous calculations (e.g. finite elements). In the present example, the ground behind and beneath the wall is relatively dense, and there are no important structures behind the wall. It thus appears that, on the basis of comparable experience, the anticipated wall and ground displacements are acceptable.

In GEO ULSs, failure occurs in the ground, and thus the wall movement is sufficiently large to mobilize the active earth pressure (P_a) along the 'virtual back' of the wall (see Fig. 9.4). This pressure is inclined at an angle equal to the slope of the ground surface ($\beta = 20°$), regardless of the angle of shearing resistance of the ground (see Section 9.7). Note that the use of the active earth pressure on the virtual back of the wall implies that the width of the heel is large enough to permit the development of a conjugate Coulomb-type 'failure surface' (inclined at $45 + \varphi'_k/2$ to the horizontal) within the soil mass above the heel, i.e. the length of the heel should not be much smaller than

$$b_{min} = h/\tan(45 + \varphi'_k/2) = 3.32 \text{ m}$$

In GEO ULSs, the wall movement is also sufficient to mobilize the limiting earth resistance, i.e. the limiting passive earth pressure force (P_p) in front of the wall base. Usually, these ULSs are checked by ensuring that the design value of the effect of the action does not exceed the design value of the corresponding resistance, i.e. $E_d \leq R_d$. The actions and resistances acting on the wall are shown in Fig. 9.4a. Note that, in the following equations, the subscript 'd' (indicating design values) has been dropped for simplicity.

To check against base sliding: $E_h \leq R_h$, where

$$E_h = P_{ah} = (P_{a,q} + P_{a,g})\cos\beta$$

is the horizontal action on virtual back of the wall ($= R_h$), and

$$R_h = P_{ph} = (G_b + G_s + P_{a,v} - P_{p,v})\tan\beta$$

is the horizontal resistance of wall base to sliding. Note that, in this design calculation, the limiting passive earth pressure force (P_{ph}) in front of the wall is treated as an earth resistance (see the discussion in Section 9.3.1 and *clause 6.5.3*(*5*)).

To check against bearing resistance failure of the foundation: $E_v \leq R_v$, where

$$E_v = G_b + G_s + P_{av} - P_{pv}$$

is the vertical action on the foundation,

$$E_h = P_{ah} - P_{ph}$$

is the horizontal action on the foundation, and R_v is the ultimate bearing resistance of the foundation for inclined and eccentric loads (calculated using the method described in *Annex D*). Note that, in this design calculation, the limiting passive earth pressure force (P_p) in front of the wall is treated as a favourable action (see the discussion in Section 9.3.1 and *clause 6.5.2.1*(*3*)*P*).

Here, P_{ah} and P_{av} are, respectively, the horizontal and vertical components of the active earth pressure force acting on the 'virtual back' of the wall (height $H = h_2 + h + b\tan\beta$):

$$P_{ah} = P_{ah,q} + P_{ah,g} \qquad P_{ah,q} = K_{ah}qH \qquad P_{ah,g} = \tfrac{1}{2}K_{ah}\gamma H^2$$

$$P_{av} = P_{av,q} + P_{av,g} \qquad P_{av,q} = P_{ah,q}\tan\beta \qquad P_{av,g} = P_{ah,g}\tan\beta$$

Note: the surface surcharge (q), as a variable action, is only included on the surface of the slope beyond the 'virtual back' of the wall where it is unfavourable, i.e. not above the heel, where it is favourable.

P_{ph} and P_{pv} are, respectively, the horizontal and vertical components of the limiting passive earth pressure force acting on the front of the wall base (height h_1):

$$P_{ph} = \tfrac{1}{2}K_{ph}\gamma H_1^2 \qquad P_{pv} = P_{ph}\tan\delta_p$$

In this example, it is assumed that the limiting passive earth pressure (inclined at an angle δ_p) develops in the GEO ULSs because it is considered that the wall can move sufficiently to mobilize the limiting passive earth pressure. It is pointed out that often conservative assumptions are made for the magnitude of the earth pressure on the passive side of gravity walls (to account for limited mobility of the wall, e.g. see *clause 6.5.3*(*5*)) like $\delta_p = 0$, or $K_p = 1$, or even neglecting the passive earth pressure completely.

G_b is the weight of the concrete wall:

$$G_b = G_{b1} + G_{b2} \qquad G_{b2} = \tfrac{1}{2}(b_1 + b_3)h\gamma_b \qquad G_{b2} = (b_2 + b_3 + b)h_2\gamma_b$$

G_s is the weight of the backfill above the heel of the wall (between the wall and the 'virtual back'):

$$G_s = G_{s1} + G_{s2} \qquad G_{s1} = bh\gamma \qquad G_{s2} = \tfrac{1}{2}b^2\gamma\tan\beta$$

When designing against bearing resistance failure of the foundation, the eccentricity (e_B) of the vertical action (E_v) is calculated as follows (see Figs 9.3 and 9.4):

(1) Calculation of the overturning moment (M_o) of actions with respect to the front of the wall base (point O), positive if anticlockwise (see Fig. 9.3):

$$M_o = \sum F_h Y_o - \sum F_v X_o$$

using the following actions (F) and corresponding lever arms:

- Action $P_{ah,q}$ with lever arm $Y = H/2$, action $P_{ah,g}$ with lever arm $Y = H/3$.
- Action $P_{av,q}$ and $P_{av,g}$ with lever arm $X = b_2 + b_3 + b$.
- Action G_{b1} with lever arm $X = b_2 + b_3/2$, action G_{b2} with lever arm $X = (b_2 + b_3 + b)/2$, assuming that the stem of the wall is inclined symmetrically at the front and back. The slight inclination of the back of the wall (0.95° to the vertical) is ignored in calculating the earth pressure in the STR-type ULS design.
- Action G_{s1} with lever arm $X = b_2 + b_3 + b/2$.
- Action G_{s2} with lever arm $X = b_2 + b_3 + \frac{2}{3}b$.
- Action $(-P_{ph})$ with lever arm $Y = h_1/3$.

(2) Calculation of the eccentricity (e_B) of the vertical action (E_v):

$$e_b = -\left(\frac{B}{2} + \frac{M_o}{E_v}\right)$$

where $B = b_2 + b_3 + b$ is the total width of the wall base. The eccentricity is positive if the vertical action is applied to the right of the centre of the wall base (see Fig. 9.3).

In STR ULSs, failure occurs in a structural element (e.g. the base of the wall stem) by the development of a plastic hinge at this location. The structural design of the wall section at the base of the stem involves calculating the design bending moment and shear force at this location due to the horizontal component of the appropriate force (P_h) resulting from the limiting active earth pressure acting over the height h of the wall stem (see Fig. 9.4b):

$$P_h = P_{h,q} + P_{h,g} \qquad P_{h,q} = K_h q h \qquad P_{h,g} = \tfrac{1}{2}K_h \gamma H^2$$

The surface surcharge (q) is considered to act everywhere on the ground surface, since it is an unfavourable (geotechnical) action with respect to the wall stem.

In STR ULSs, the appropriate earth pressure coefficient (K_h) should be compatible with the wall rotation when a plastic hinge develops at the base of the stem. As the rotation of the wall stem under this condition may not be sufficient to mobilize fully the active earth pressure in the backfill, two alternative values of the earth pressure are considered in this example (other assumptions may also be appropriate, depending on the kinematic constraints of the wall):

(1) The active earth pressure, which is relevant if the wall movement is sufficiently large to cause a ULS condition in the retained ground when a ULS condition occurs in the structure (base of stem). Then, $K_h = K_{ah}$.
(2) An intermediate earth pressure, corresponding to the earth pressure coefficient $K_h = 0.5(K_{ah} + K_0)$, i.e. the average of the horizontal earth pressure at-rest coefficient (K_0) and the horizontal active earth pressure coefficient (K_{ah}). An earth pressure of about this magnitude may be relevant (as an empirical rule) if the wall and the foundation are stiff and a ULS condition develops in the concrete section prior to the development of a ULS in the retained ground. (see *clause 9.5.4*).

The design value of the ground angle of shearing resistance (φ'_d) is calculated using the equation

$$\varphi'_d = \arctan\left(\frac{1}{\gamma_{\varphi'}}\tan\varphi'_k\right)$$

where φ'_k is the characteristic angle of shearing resistance of the ground, and the partial factor $\gamma_{\varphi'}$ is obtained from *Table A.4*.

In DA-1 Combination 1 and DA-2, $\gamma_{\varphi'} = 1$ (*Table A.4*), and thus $\varphi'_d = \varphi'_k = 32°$, and, on the front of the wall, $\delta_d = \delta_k = 20°$, while, on the virtual back of the wall, $\delta_d = \beta = 20°$. The design (and characteristic) value of the active earth pressure coefficient (K_{ah}) for the

backfill is determined from *Fig. C.1.3* for $\varphi'_d = 32°$, $\beta = 20°$ and $\delta_d/\varphi'_d = \beta/\varphi'_d = 0.625$. Hence, $K_{ah} = 0.35$. Note that the inclination of the earth pressure on the virtual back of the wall is assumed to be equal to the inclination of the ground surface, regardless of the ground parameters (see Section 9.7). The design value of the at-rest horizontal earth pressure coefficient of the backfill is calculated from *equation* (*9.2*) with OCR = 1:

$$K_0 = (1 - \sin \varphi'_d)(1 + \sin \beta) = 0.631$$

The design (and characteristic) value of the limiting passive earth pressure coefficient is obtained from *Fig. C.2.1* for $\varphi'_d = 32°$, $\beta = 0°$ and $\delta_d/\varphi'_d = 20/32 = 0.625$. Hence, $K_{ph} = 5.5$.

In DA-1 Combination 2 and DA-3, $\gamma_{\varphi'} = 1.25$ (*Table A.4*), and thus $\varphi'_d = 26.6°$, and, on the front of the wall, $\delta_d = \tan^{-1}(\tan \varphi'_k/1.25) = 16.2°$, while, on the virtual back of the wall, $\delta_d = \beta = 20°$. The design value of the active earth pressure coefficient (K_{ah}) of the backfill is obtained from *Fig. C.1.3* of *Annex C* for $\varphi'_d = 26.6°$, $\beta = 20°$ and $\delta_d/\varphi'_d = \beta/\varphi'_d = 0.75$. Hence, $K_{ah} = 0.48$. The design value of the at-rest horizontal earth pressure coefficient of the backfill is calculated from *equation* (*9.2*) with OCR = 1:

$$K_0 = (1 - \sin \varphi')(1 + \sin \beta) = 0.741$$

The design value of the limiting passive earth pressure coefficient is obtained from *Fig. C.2.1* of *Annex C* for $\varphi'_d = 26.6°$, $\beta = 0°$ and $\delta_d/\varphi'_d = 16.2/26.6 = 0.62$. Hence, $K_{ph} = 3.9$.

The sequence of the calculations and the main results for the three Design Approaches and for the conventional OFS method are listed in the following tables. The appropriate partial factors (taken from *Annex A*) are also included in the tables for ease of reference. Note that in DA-1 the width of the footing is determined from the more critical of the two combinations (in this example, Combination 2). In the OFS method, the 'design values' of the various quantities are identical to their 'characteristic values', since this method does not include partial factors; the 'characteristic values' are calculated using the characteristic ground parameters of the Eurocode Design Approaches.

The characteristic and design values of the geotechnical ($P_{a,g}$, $P_{a,q}$) and non-geotechnical (G_b, G_s) actions are listed in Table 9.2, together with the design values of the effects of the actions (net vertical and horizontal actions on the foundation) for GEO ULS calculations. The application of the partial factors for calculating the design values of the actions is described in Section 9.7. For example, the design value of the unfavourable variable geotechnical action $P_{ah,q}$ is calculated using the equation

$$F_d = \gamma_F F(X_k/\gamma_M)$$

i.e.

$$P_{ah,q} = K_{ah}(\gamma_F q)H$$

with partial factors given in Table 9.2, as follows:

- In DA-1 Combination 1:

  $$P_{ah,q} = 0.35 \times (\mathbf{1.5} \times 10) \times 7.70 = 40.43 \text{ kN/m}$$

- In DA-1 Combination 2 and DA-3:

  $$P_{ah,q} = 0.48 \times (\mathbf{1.3} \times 10) \times 8.21 = 51.23 \text{ kN/m}$$

- In DA-2:

  $$P_{ah,q} = 0.35 \times (\mathbf{1.5} \times 10) \times 7.84 = 41.16 \text{ kN/m}$$

The different values of the height H (see Fig. 9.3) correspond to the different values of the heel width b in each Design Approach. Note that the earth pressure force on the passive side of the wall (P_p) is considered as a favourable geotechnical action when designing against bearing resistance failure, and as an earth resistance when designing against base sliding (see the discussion in Section 9.3.1).

Table 9.2. Example 9.1 – parameters for design of concrete stem (gravity) wall

	DA-1					
	Comb. 1	Comb. 2	DA-2	DA-2*	DA-3	OFS[a]
Required width of heel of wall base, b (m)	**2.47**	**3.87**	**2.86**	**2.17**	**3.87**	**2.79**
Total width of wall base, B (m)	**4.12**	**5.52**	**4.51**	**3.82**	**5.52**	**4.44**
Height of virtual wall, H (m)	7.70	8.21	7.84	7.59	8.21	7.82
I. GEO ULSs						
Characteristic value of soil weight, $G_{s1} + G_{s2}$ (kN/m)	318.61	518.91	372.97	277.54	518.91	363.13
Characteristic value of concrete weight, $G_{b1} + G_{b2}$ (kN/m)	165.50	192.38	172.99	159.74	192.38	171.65
Characteristic value of $P_{ah,\,q}$ (kN/m)	26.95	–	27.44	26.56	–	27.35
Characteristic value of $P_{ah,\,g}$ (kN/m)	207.46	–	215.18	201.62	–	213.79
Characteristic value of $P_{av,\,q}$ (kN/m)	9.81	–	9.99	9.67	–	9.96
Characteristic value of $P_{av,\,g}$ (kN/m)	75.51	–	78.32	73.38	–	77.81
Characteristic value of P_{ph} (kN/m)	35.20	–	35.20	35.20	–	35.20
Characteristic value of P_{pv} (kN/m)	12.81	–	12.81	12.81	–	12.81
Partial factor on soil shearing resistance	**1.0**	**1.25**	**1.0**	**1.0**	**1.25**	**1.0**
Design value of angle of shearing resistance, φ (°)						
Backfill	32	26.6	32	32	26.6	32
Passive side of footing	32	26.6	32	32	26.6	32
Below footing	32	26.6	32	32	26.6	32
Design value of wall–ground interface parameter, δ (°)						
Backfill (equal to surface slope $\delta = \beta$)	20	20	20	20	20	20
Passive side of footing, δ_p	20	16.23	20	20	16.23	20
Below footing (rough footing), $\delta = \varphi$	32	26.6	32	32	26.6	32
Design value of horizontal active earth pressure coefficient, K_{ah}	0.35	0.48	0.35	0.35	0.48	0.35
Design value of horizontal at-rest earth pressure coefficient, K_0	0.631	0.741	0.631	0.631	0.741	0.631
Design value of intermediate earth pressure coefficient, K_h	0.49	0.61	0.49	0.49	0.61	0.49
Design value of horizontal passive earth pressure coefficient, K_{ph}	5.50	3.90	5.50	5.50	3.90	5.50
Partial factor on vertical actions, $G_s + G_b$						
Favourable permanent for base sliding	**1.0**	**1.0**	**1.0**	**1.0**	**1.0**	**1.0**
Favourable permanent for bearing resistance failure	**1.0**	**1.0**	**1.0**	**1.0**	**1.0**	**1.0**
Partial factor on geotechnical actions $P_{av,\,q}$ and $P_{ah.q}$: unfavourable variable	**1.5**	**1.3**	**1.5**	**1.5**	**1.3**	**1.0**
Partial factor on geotechnical actions $P_{av,\,g}$ and $P_{ah,\,g}$: unfavourable permanent	**1.35**	**1.0**	**1.35**	**1.35**	**1.0**	**1.0**
Partial factor on geotechnical actions P_{pv} and P_{ph} (passive earth pressure is a favourable permanent action)	**1.0**	**1.0**	**1.0**	**1.0**	**1.0**	**1.0**
Design value of horizontal action, P_{ah} (kN/m)	320.49	374.65	331.66	312.03	374.65	241.14
Design value of vertical passive earth pressure force, P_{pv} (kN/m)	12.81	7.27	12.81	12.81	7.27	12.80

Table 9.2. Contd

	DA-1					
	Comb. 1	Comb. 2	DA-2	DA-2*	DA-3	OFS[a]
Design value of horizontal passive earth pressure force, P_{ph} (kN/m)	35.20	24.96	35.20	35.20	24.96	35.20
Design value of resultant vertical action						
For base sliding, $G_s + G_b + P_{av}$ (kN/m)	600.76	847.66	666.68	520.33	847.66	622.55
For bearing resistance failure, $G_s + G_b + P_{av} - P_{pv}$ (kN/m)	587.95	840.39	653.87	538.04	840.39	609.74
Design value of resultant horizontal action						
For base sliding, P_{ah} (kN/m)	320.49	374.65	331.66	312.03	374.65	241.10
For bearing resistance failure, $P_{ah} - P_{ph}$ (kN/m)	285.29	349.69	296.46	276.83	349.69	205.94

[a] In the OFS method, all values are 'nominal' (characteristic) values

The design values of the effects of the actions are calculated from the design values of the relevant actions using the following equations (the index 'd' is omitted for conciseness):

- For base sliding (net horizontal action):

  $$E_h = P_{ah} = (P_{a,q} + P_{a,g})\cos\beta = P_{ah,q} + P_{ah,g}$$

- For bearing failure (resultant vertical action):

  $$E_v = G_b + G_s + P_{av} - P_{pv}$$

Finally, note that the calculated width, b of the heel of the wall, in DA-1 and DA-3 is greater than the minimum value, and in DA-2 is not much smaller than the minimum value,

$$b_{min} = h/\tan(45 + \varphi_k'/2) = 3.32 \text{ m}$$

which permits the development of a conjugate Coulomb-type 'failure surface' (inclined at $45 + \varphi_k'/2$ to the horizontal) within the soil mass above the heel. Thus these calculated widths validate the assumption of the active earth pressure acting on the 'virtual back' of the wall.

Note that in this example, the weight of the wall and soil ($G_b + G_s$) is a favourable action when designing against bearing resistance failure, because its favourable effect in reducing the load eccentricity on the foundation (favourable effect) is more significant with regard to the bearing resistance than its unfavourable effect in increasing the vertical load. In different wall configurations the significance of these effects may be reversed. Thus, it is recommended that two calculations are performed, one with partial factors for 'favourable' and one for 'unfavourable' actions on the weight of the wall and the soil.

The design values of the resistances required in the ULS analyses of the wall against base sliding and bearing resistance failure (GEO ULSs) are presented in Table 9.3. The horizontal resistance against base sliding is calculated using the equation

$$R_h = P_{ph} + (G_b + G_s + P_{av} - P_{pv})\tan\delta'$$

Table 9.3. Example 9.1 – results of the GEO design for the concrete stem (gravity) wall

	DA-1					
	Comb. 1	Comb. 2	DA-2	DA-2*	DA-3	OFS[a]
Width of heel of wall base, b (m)	**2.47**	**3.87**	**2.86**	**2.17**	**3.87**	**2.79**
Total width of wall base, B (m)	**4.12**	**5.52**	**4.51**	**3.82**	**5.52**	**4.44**
A. Design against sliding (GEO ULS)						
Character value of horizontal sliding resistance $R_{h,k}$ (kN/m)	–	–	–	352.3	–	416.2
Partial factor on sliding resistance (on $R_v \tan \delta$)	**1.0**	**1.0**	**1.1**	**1.1**	**1.0**	**1.0**
Partial factor on earth resistance (on P_{ph})	**1.0**	**1.0**	**1.4**	**1.4**	**1.0**	**1.0**
Design value of horizontal sliding resistance $R_{h,d}$ (kN/m)	402.6	445.1	396.6	313.4	445.1	416.2
Design value of net horizontal effect of the actions $E_{h,d}$ (kN/m)	320.5	374.6	331.7	312.0	374.6	241.1
Over-design factor for Design Approaches or OFS, $R_{h,d}/E_{h,d}$	1.26	1.19	1.20	1.00	1.19	1.73
Minimum required value of $R_{h,d}/E_{h,d}$ for stability	**1.0**	**1.0**	**1.0**	**1.0**	**1.0**	**1.5**
Result for design: CR, critical; NCR, not critical	NCR	NCR	NCR	CR	NCR	NCR
B. Design against bearing resistance failure (GEO ULS)						
Design value of overturning moment with respect to O, M_{do} (kN m/m) (positive if anticlockwise – see Fig. 9.3)	–840.8	–1986.1	–1125.3	–755.0	–1986.1	–1177.3
Design value of total vertical effect of the actions, $E_{v,d}$ (kN/m)	587.9	840.4	653.9	538.0	840.4	609.7
Design value of total horizontal effect of the actions, $E_{h,d}$ (kN/m)	285.3	349.7	296.5	193.0	349.7	205.9
Design value of the overturning moment with respect to the centre of the wall base, M_d (kN m/m) (positive if anticlockwise – see Fig. 9.3)	370.4	333.4	349.2	214.3	333.4	176.3
Design eccentricity of $E_{v,}$ with respect to the centre of the base, e_B (m) (positive if action is to the right of centre – see Fig. 9.3)	–0.63	–0.40	–0.53	–0.42	–0.40	–0.29
Effective foundation width: $B' = B - 2 \times \text{abs}(e_B)$ (m)	2.86	4.73	3.44	2.98	4.73	3.86
Partial factor on embedment pressure (p): favourable permanent action	**1.0**	**1.0**	**1.0**	**1.0**	**1.0**	**1.0**
Design value of embedment pressure, $p = \gamma h_1$ (kPa)	16.00	16.00	16.00	16.00	16.00	16.00

Table 9.3. Continued

	DA-1					
	Comb. 1	Comb. 2	DA-2	DA-2*	DA-3	OFS[a]
Bearing resistance factors						
N_q	23.18	12.59	23.18	23.18	12.59	23.18
N_γ	27.72	11.59	27.72	27.72	11.59	27.72
i_q	0.265	0.341	0.299	0.384	0.341	0.439
i_γ	0.136	0.199	0.163	0.238	0.199	0.290
Characteristic value of bearing resistance, R_{vk} (kN/m)	–	–	–	1007.8	–	1828.5
Partial factor on bearing resistance, γ_R	**1.0**	**1.0**	**1.4**	**1.4**	**1.0**	**1.0**
Design value of bearing resistance, R_{vd} (kN/m)	590.3	839.8	655.4	719.9	839.8	1828.5
Design value of total vertical action, $E_{v,d}$ (kN/m)	588.0	840.0	653.9	538.0	840.0	609.7
Over-design factor for Design Approaches or OFS, $R_{v,d}/E_{v,d}$	1.00	1.00	1.00	1.34	1.00	3.00
Minimum required value of $R_{v,d}/E_{v,d}$ for stability	1.00	1.00	1.00	1.00	1.00	3.00
Result for design: CR, critical; NCR, not critical	NCR	CR	CR	NCR	CR	CR

[a] In the OFS method, all values are 'nominal' (characteristic) values

The vertical component of the bearing resistance (R_v) is calculated using the procedure recommended in *Annex D* for surface foundations. In general, design values of resistances are calculated using the equation

$$R_d = R[\gamma_F F(X_k/\gamma_M)]/\gamma_R$$

as follows (see example below):

(1) In DA-1 Combination 1, using design values of the actions, and design values of the soil parameters (φ', δ') equal to the characteristic values (since $\gamma_M = 1$) and $\gamma_R = 1$.
(2) In DA-1 Combination 2 and DA-3, using design values of soil parameters and actions and $\gamma_R = 1$.
(3) In DA-2, using design values of the soil parameters (φ', δ') equal to the characteristic values (since $\gamma_M = 1$), and design values of actions and appropriate partial factors for resistances ($\gamma_R = 1.1$ and 1.4 for sliding and $\gamma_R = 1.4$ for bearing resistance). An alternative calculation (DA-2*) is also performed, which is similar to DA-2 but uses the characteristic (and not the design) values of the actions in the calculation of design resistances.

The characteristic value of the resistance is not required in any of the Eurocode Design Approaches (except in the variation DA-2*). It is only calculated in the OFS method. For example, the design value of the horizontal resistance against base sliding ($R_{h,d}$) is calculated as follows:

- In DA-1 Combination 1:

  $R_{h,d} = 35.20/\mathbf{1.0} + [(484.11 + 116.65–12.81)\tan 32]/\mathbf{1.0} = 402.6$ kN/m

- In DA-1 Combination 2 and DA-3:

  $R_{h,d} = 24.96/\mathbf{1.0} + [(711.3 + 136.36–7.27)\tan 26.6]/\mathbf{1.0} = 445.1$ kN/m

- In DA-2:

  $R_{h,d} = 35.20/\mathbf{1.4} + [(545.96 + 120.71–12.8)\tan 32]/\mathbf{1.1} = 396.6$ kN/m

- In DA-2*, using the width of heel of the wall, which is critical in DA-2 ($b = 2.86$ m), for comparison:

  $R_{h,d} = P_{ph,d} + [(G_b + G_s + P_{av} - P_{pv})\tan \delta']_d$

  $\Rightarrow R_{h,d} = P_{ph,k}/\gamma_{R,e} + [(G_{b,k} + G_{s,k} + P_{av,k} - P_{pv,k})\tan \delta'_k]/\gamma_{R,h}$

  $\Rightarrow R_{h,d} = 35.20/1.4 + [(172.99 + 372.97 + 88.31–12.81)\tan 32]/\mathbf{1.1} = 378.2$ kN/m

  The corresponding effect of the actions is

  $E_d = P_{ah,d} = P_{agh,d} + P_{aqh,d} = \gamma_G P_{agh,d} + \gamma_Q P_{aqh,d}$

  $\Rightarrow E_d = \mathbf{1.35} \times 215.18 + \mathbf{1.5} \times 27.44 = 331.66$

  The wall is more than safe against base sliding since

  $E_d = 331.66 \leq 378.2 = R_{h,d}$

  The over-design factor is

  $R_{h,d}/E_d = 378.2/331.66 = 1.14 \geq 1$

- In the OFS method:

  $R_{h,d} = 35.20 + (534.78 + 87.77–12.8) \tan 32 = 416.2$ kN/m

Note that DA-2 and DA-2* give slightly different results for $R_{h,d}$ (396.6 and 378.2 kN/m, respectively) when the same value of the width of the heel of the wall b is used. The difference is due to the unfavourable action P_{av}, which is factored by $\gamma_F > 1$ in DA-2 ($P_{av} = 120.71$ kN/m) and factored by $\gamma_F = 1$ in DA-2* ($P_{av} = 88.31$ kN/m). All the other actions involved in the calculation of the sliding resistance are favourable permanent actions, and thus are factored by $\gamma_F = 1$ in both variations of DA-2.

The cells in Table 9.3 denoted CR (critical) or NCR (not critical) indicate the calculation which is critical in determining the width of the wall base. In this example, bearing resistance failure is found to be critical in all the Design Approaches. In DA-1, Combination 2 controls the width of the wall base.

Comparison of DA-2 with the alternative approach DA-2* indicates that DA-2* is less conservative, since the required foundation width for DA-2* (3.82 m) is smaller than that required for DA-2 (4.51 m); in fact, DA-2* is the least conservative of all the Design Approaches, including the OFS method with minimum required overall factors of safety of 1.5 against sliding and 3.0 against bearing failure.

The design values of the bending moment and the shear force at the bottom of the stem of the wall for structural (STR) ULSs are presented in Table 9.4, together with the coefficients of earth pressure, partial action factors and earth pressure forces used to calculate these. The calculations are performed for two alternative earth pressure magnitudes: the active value and an earth pressure between the K_0 and the active values, to illustrate the effect of the relative flexibility of the wall with respect to the retained ground, i.e. the occurrence of the structural ULS prior to, or simultaneously with, the ULS in the retained ground (see the discussion on intermediate earth pressures for ULS design calculations in Section 9.5).

Bending moments and shear forces are the effects of actions and thus their design values are calculated using the design values of the relevant actions (the earth pressure, in the case of the effects of actions at the bottom of the stem of the wall), i.e. using the equation $E_d = E(F_d)$. In DA-1, the critical wall base width (obtained from Combination 2) is used.

Table 9.4. *Example 9.1 – Results of STR design of concrete stem (gravity) wall*

	DA-1					
	Comb. 1	Comb. 2	DA-2	DA-2*	DA-3	OFS[a]
Width of heel of wall base, b (m)	**3.87**		**2.86**	**2.17**	**3.87**	**2.79**
Total width of footing, B (m)	**5.52**		**4.51**	**3.82**	**5.52**	**4.44**
II. STR ULS						
Structural design of wall (at bottom of stem)						
(a) Design using limiting active earth pressure						
Characteristic value of K_{ah} coefficient	0.35	–	0.35	0.35	–	0.35
Design value of K_{ah} coefficient	0.35	0.48	0.35	0.35	0.48	0.35
Partial factor on action $P_{ah,\,q}$	**1.5**	**1.3**	**1.5**	**1.5**	**1.3**	**1.0**
Partial factor on action $P_{ah,\,g}$	**1.35**	**1.0**	**1.35**	**1.35**	**1.0**	**1.0**
Design value of $P_{ah,\,q}$ (kN/m)	31.5	37.4	31.5	31.5	37.4	21.0
Design value of $P_{ah,\,g}$ (kN/m)	170.1	172.8	170.1	170.1	172.8	126.0
Design value of bending moment, M_d (kN m/m)	434.7	457.9	434.7	434.7	457.9	315.0
Design value of shear force, V_d (kN/m)	201.6	210.2	201.6	201.6	210.2	147.0
(b) Design using intermediate earth pressure: $K = 0.5(K_a + K_0)$						
Characteristic value of K_h coefficient	0.49	–	0.49	0.49	–	0.49
Design value of K_h coefficient	0.49	0.61	0.49	0.49	0.61	0.49
Partial factor on action $P_{h,\,q}$	**1.5**	**1.3**	**1.5**	**1.5**	**1.3**	**1. 0**
Partial factor on action $P_{h,\,g}$	**1.35**	**1.0**	**1.35**	**1.35**	**1.0**	**1.0**
Design value of $P_{h,\,q}$ (kN/m)	44.1	47.7	44.1	44.1	47.7	29.4
Design value of $P_{h,\,g}$ (kN/m)	238.3	220.0	238.3	238.3	220.0	176.6
Design value of bending moment, M_d (kN m/m)	609.1	582.9	609.1	609.1	582.9	441.4
Design value of shear force, V_d (kN/m)	282.4	267.6	282.4	282.4	267.6	206.0

[a] In the OFS method, all values are 'nominal' (characteristic) values

The bending moments and shear forces of the Eurocode Design Approaches are factored, while those of the conventional OFS method are unfactored, and thus are not directly comparable with the Eurocode 7 results. Specifically, the Eurocode 7 results are ULS design values of the effects of actions for use directly in the structural design of the concrete section (according to Eurocode 2). The bending moments calculated according to the OFS method may be used in the structural design of the concrete section (according to Eurocode 2) after application of the appropriate partial factors for actions. For example, the bending moment may be multiplied by a factor of **1.4** as an approximate equivalent partial factor weighting, corresponding to the Eurocode partial factors of **1.35** and **1.5** for permanent and variable actions, respectively, in structural designs for STR ULSs.

The following conclusions can be drawn from the results of the above analyses:

(1) For GEO ULSs, DA-1 and DA-3 give identical results since:
   (a) In DA-1 Combination 2 is critical in the design; this combination uses the same material partial factors as DA-3.
   (b) All actions in the system are geotechnical (there are no structural actions); geotechnical actions have the same partial factors in DA-1 Combination 2 and in DA-3.

(2) For GEO ULSs, DA-2 and DA-2* are less conservative than DA-1 and DA-3, since the required width of the wall base (B = 4.51 m in DA-2 and B = 3.82 m in DA-2*) is 18–31% smaller than that required by DA-1 and DA-3 (B = 5.52 m).
(3) For the structural design of the stem (STR ULSs), DA-2 and DA-2* are slightly less conservative by about 5% (M_d = 434.7 kN m/m) compared with DA-1 and DA-3 (which give identical results: M_d = 457.9 kN m/m).
(4) For STR-type limit states, the design values of the effects of actions (bending moment and shear force) at the bottom of the stem of the wall depend strongly on the assumed magnitude of the earth pressure. For example, in DA-1 and DA-3, the effects of actions calculated with the assumed intermediate earth pressure are 27% larger than those calculated using the active earth pressure (582.9 versus 457.9 kN m/m). This conclusion illustrates the importance of ensuring that the structural design of the wall allows some lateral movement.
(5) In DA-1, the Combination 2 set of partial factors is critical in the geotechnical design (GEO ULS). In the structural design (STR ULS) of the stem, Combination 2 is critical if active earth pressures are used, while Combination 1 is critical if intermediate earth pressures are used.
(6) The OFS method is the least conservative in terms of the required width of the wall base (B = 4.44 m compared with B = 5.52 m for DA-1 and DA-3, respectively, and B = 4.51 m for DA-2) with the exception of DA-2* (where B = 3.82 m). A possible explanation is that the OFS method makes no allowance for uncertainty in the active force on the virtual back of the wall. The wisdom of this is, however, questionable.
(7) In the structural design of the wall stem, the OFS method gives roughly the same results as the Eurocode Design Approaches since, using the multiplication factor of 1.4 (as mentioned above), the comparable 'design' bending moment of the conventional method is 315.0 × **1.4** = 441.0 kN m/m, i.e. about the same as the design values of all the Eurocode Design Approaches (457.9–434.7 kN m/m).

It should be pointed out that the above conclusions are applicable in the case of this particular example only. In other examples, involving different wall geometries and ground parameters, the corresponding conclusions may be different.

Example 9.2: ULS and SLS design of an embedded sheet pile wall

This example presents the ULS and SLS design of an embedded sheet pile wall. The wall, shown in Fig. 9.5, has a nominal excavation depth of 5.0 m; an additional excavation depth to allow for accidental overdig (see Section 9.3.2) equal to 10% × 4.0 m = 0.40 m is added, giving a design value of the excavation depth H = 5.40 m. The wall is supported by one row of anchorages at an elevation of –1.0 m (anchorage inclination β = 10°). For excavations in stiff clays, drained conditions are usually critical for stability; thus, effective stress analyses are performed using effective stress ground parameters and steady state hydraulic conditions.

The ground profile consists of two layers (with the interface at an elevation of –4.0 m) having the following parameters for use in the ULS design (all values are characteristic):

- Layer A (medium-dense to dense gravelly sand):
  - Weight density above the water table: γ_k = 18 kN/m^3.
  - Saturated weight density below the water table: γ_{sk} = 20 kN/m^3.
  - Angle of shearing resistance: φ'_k = 35°.
  - Maximum value of wall–ground interface parameter used on active side (*clause 9.5.1(6)*): $\delta_k = \frac{2}{3}\varphi'_k$ = 23°.
- Layer B (stiff clay):
  - Saturated weight density below the water table: γ_{sk} = 20 kN/m^3.
  - Angle of shearing resistance: φ'_k = 24°.

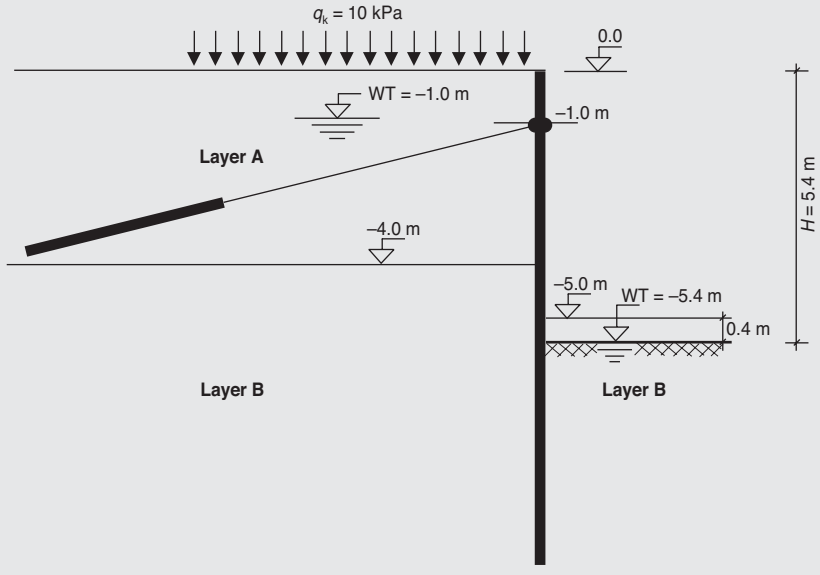

Fig. 9.5. Geometrical data for an embedded wall

- Cohesion intercept: $c'_k = 5$ kPa.
- Maximum value of wall–ground interface parameter (indicative values for long-term conditions used; other values may also be appropriate – see *clause 9.5.1(8)*):
  Active side: $\delta_{ak} = \frac{2}{3}\varphi'_k = 16°$.
  Passive side: $\delta_{pk} = \frac{1}{2}\varphi'_k = 12°$.

The water table in the sand layer is assumed to remain at an elevation of –1.0 m, where the ground level behind the wall is at an elevation of 0.0 m. Due to the excavation, the water table in the pit is lowered to an elevation of –5.4 m. The gravelly sand (layer A) is assumed to maintain hydrostatic conditions, while the total hydraulic head difference (equal to 4.4 m) develops within the stiff clay; linear head loss is assumed along an idealized flow path starting from an elevation of –4.0 m (behind the wall), going around the toe of the wall and exiting at an elevation of –5.4 m in front of the wall (total length of path: $2L + 1.4$ m, where L is the wall penetration below the excavation level). This method ensures that the water pressure at the toe of the wall (both sides) is in equilibrium, as anticipated. Thus, the water pressure on the active side of the wall is lower than the hydrostatic pressure (for the water table at an elevation of –1.0 m), while on the passive side of the wall the water pressure is higher than hydrostatic (for the water table at an elevation of –5.4 m). Vertical effective stresses (σ'_v) on both sides of the wall are calculated using these water pressures (u) from the equation $\sigma'_v = \sigma_v - u$, where $\sigma_v = \gamma z$ is the total vertical (geostatic) stress (z is measured from the ground surface behind the wall and from the bottom of the excavation in front of the wall). Hydraulic failure of the bottom of the excavation by heave is examined according to the principles of *Section 10*.

Other input parameters are:

- Weight density of water: $\gamma_k = 10$ kN/m^3.
- Surcharge at ground surface (variable action): $q_k = 10$ kPa.
- Steel sheet pile (Frodingham 3N): $W_{el} = 1688$ cm^3/m, $W_{pl} \approx 1900$ cm^3/m, steel grade S355 GP, yield strength 355 MPa.

The design value of the ultimate moment of resistance ($M_{u,d}$) of the sheet pile (Frodingham 3N) is calculated according to EN 1993-5:

$M_{u,d} = W_{pl} f_y / \mathbf{1.0} = 675$ kN m/m

The value of the material partial factor for steel (**1.0**) is taken from EN 1993-5, and may be set by national determination.

In addition to the classical LEM , a spring model is also used below, in the ULS design with DA-1 Combination 1 and DA-2 and in the SLS design. Spring models can be used in DA-1 Combination 2 and DA-3 designs following the recommendations given in Section 9.7. In the spring model, the calculations use the characteristic values of all stiffness parameters (soil, anchor and wall). This model requires soil stiffness parameters, the wall bending stiffness (EI), and the anchor axial stiffness and prestress force. The soil is simulated by an elastic–perfectly plastic spring yielding at the limiting active and passive earth pressures. The characteristic value of the pre-yield spring stiffness (horizontal subgrade modulus) is assumed equal to $k = 10\,000$ kN/m^3 in the sand and $k = 6000$ kN/m^3 in the clay layer. The characteristic value of the coefficient of earth pressure at rest is $K_{0,k} = 0.50$ in the sand and $K_{0,k} = 0.95$ in the clay layer. The characteristic anchor pre-yield axial stiffness $K = EA/L$ is calculated from its free length ($L = 11$ m), cross-section ($A = 1$ cm^2/m) and the Young modulus of steel ($E = 210$ GPa). The anchor prestress force (lock-off force) $P_0 = 100$ kN/m was obtained by trial and error. The sheet pile wall pre-yield bending stiffness is $EI = 5 \times 10^4$ kN m^2/m.

In the LEM the design values of ground parameters and the corresponding calculated horizontal earth pressure coefficients for limiting active (K_{ah}) and passive (K_{ph}) conditions are given in Table 9.5. The design values of K_{ah} and K_{ph} are obtained from *Figs C.1.1* and *C.2.1*.

ULS design of the wall

In the ULS design of the embedded wall, the aim is to determine:

(1) The minimum embedment depth. This is calculated by assuming free-earth support conditions at the toe, i.e. assuming that the wall moves sufficiently to mobilize the limiting active and passive earth pressures on the retained and the resisting sides, respectively (LEM).
(2) The bending moment distribution on the wall and the anchor force. These may be determined by two methods:
   (a) Using known earth pressure distributions on the wall, namely the limiting earth pressures (i.e. using a LEM without earth pressure redistribution).
   (b) Using a spring model, i.e. a beam model of the wall supported on soil springs with appropriate stiffness. This model includes wall–ground interaction and earth pressure redistribution. Details concerning the application of spring models are presented in Section 9.7.

The following horizontal actions are applied to the wall in the LEM:

(1) The horizontal component of the active earth pressure on the retained side:

$$p'_{ah} = p'_{ah,g} + p'_{ah,q}$$

at a depth z from ground surface, where

$$p'_{ah,g} = K_{ah}\sigma'_v - 2c'\sqrt{K_{ah}}$$

is an unfavourable permanent geotechnical action and σ'_v is the vertical effective stress at depth z, and

$$p'_{ah,q} = K_{ah}q$$

is an unfavourable variable geotechnical action.

(2) The net water pressure (pressure on the retained side minus pressure on the resisting side), which is an unfavourable permanent geotechnical action. The net water

Table 9.5. Example 9.2 – LEM

	DA-1		DA-2	DA-3	OFS[a]
	Comb. 1	Comb. 2			
Partial factor on ground strength parameters, γ_M	**1.0**	**1.25**	**1.0**	**1.25**	**1.0**
Design value of the angle of shearing resistance, φ' (°)					
Layer A	35	29.3	35	29.3	35
Layer B	24	19.6	24	19.6	24
Design value of cohesion intercept, c' (kPa)					
Layer B	5	4	5	4	5
Max. design value of wall–ground interface parameter, $\delta = \frac{2}{3}\varphi'$ (°)					
Layer A – active side	23	19.6	23	19.6	23
Layer B – active side	16	13.1	16	13.1	16
Layer B – passive side	12	9.8	12	9.8	12
Design value of horizontal active earth pressure coefficient, K_{ah}					
Layer A	0.23	0.30	0.23	0.30	0.23
Layer B	0.37	0.45	0.37	0.45	0.37
Design value of horizontal passive earth pressure coefficient, K_{ph}					
Layer B	3.20	2.50	3.20	2.50	3.20
Partial factors for actions, γ_F					
Unfavourable permanent	**1.35**	**1.0**	**1.35**	**1.0**	**1.0**
Unfavourable variable	**1.5**	**1.3**	**1.5**	**1.3**	**1.0**
Favourable permanent	**1.0**	**1.0**	**1.0**	**1.0**	**1.0**
Partial factor for earth resistance on passive side, γ_R	**1.0**	**1.0**	**1.4**	**1.0**	**1.0**

[a] In the OFS method, all values are 'nominal' (characteristic) values

pressure is zero at the toe of the wall, since at this point water pressures on both sides are in equilibrium. Thus, the characteristic value of the net water pressure increases linearly from zero at an elevation of –1.0 m to 30 kPa at an elevation of –4.0 m, reaches a maximum value at an elevation of –5.4 m (depending on the wall penetration) and then reduces linearly to zero at the toe of the wall (see Table 9.6).

The above horizontal actions are resisted by the horizontal component of the anchor force and by the horizontal component of the limiting passive earth pressure on the retained side. The limiting passive earth pressure at a depth z' below the excavation base is calculated from the equation

$$p'_{ph} = K_{ph}\sigma'_v + 2c'\sqrt{K_{ph}}$$

where σ'_v is the corresponding vertical effective stress. The limiting passive earth pressure is treated as a resistance (see the discussion in Section 9.3.1).

Design values of actions are calculated according to the method described in Section 9.7. For example, the design value of the unfavourable variable geotechnical action $p'_{ah,\,q}$ in

$$F_d = \gamma_F F(X_k/\gamma_M)$$

i.e.

$p'_{ah,q} = \gamma_F K_{ah} q$

and with partial factors from Table 9.5:

- In DA-1 Combination 1, step 1, and DA-2:

  $p'_{ah,q} = \mathbf{1.5} \times 0.23 \times 10 = 3.45$ kPa
- In DA-1 Combination 2 and DA-3:

  $p'_{ah,q} = \mathbf{1.3} \times 0.30 \times 10 = 3.90$ kPa

The design value of the limiting passive earth pressure (resistance) is calculated using the equation:

$R_d = R[F(X_k/\gamma_M)]\gamma_R$

i.e.

$p_{ph} = (K_{ph}\sigma_v' + 2c'\sqrt{K_{ph}})/\gamma_R$

with partial factors from Table 9.5. For example, at a depth $z' = 3$ m below the excavation base, where the characteristic vertical effective stress $\sigma_v' = 30$ kPa and assuming hydrostatic pore pressures (adjusted for equality at either side of the toe), the design value of the limiting passive earth pressure is:

- In DA-1 Combination 1, step 1:

  $p'_{ph} = [3.2 \times (\mathbf{1.0} \times 30) + 2 \times 5 \times \sqrt{(3.2)}]/\mathbf{1.0} = 113.9$ kPa
- In DA-2:

  $p'_{ph} = [3.2 \times (\mathbf{1.0} \times 30) + 2 \times 5 \times \sqrt{(3.2)}]/\mathbf{1.4} = 81.3$ kPa
- In DA-1 Combination 2 and DA-3:

  $p'_{ph} = [2.5 \times (\mathbf{1.0} \times 30) + 2 \times 4 \times \sqrt{(2.5)}]/\mathbf{1.0} = 87.6$ kPa

In fact, due to the upward water flow, the actual vertical effective stress (σ_v') is somewhat lower than the values obtained above, assuming hydrostatic water pressures. Note that the vertical effective stress at a particular depth varies in each Design Approach as the wall penetration is different. The correct value of the vertical effective stress was used in the worked example (see Table 9.6), while the same hydrostatic pore pressure was used in the above calculation in order to compare the three Design Approaches.

In the LEM, the required wall penetration is calculated by ensuring bending moment equilibrium of the design values of actions and resistances around the anchorage point (since free-earth support conditions are selected). Then, the design value of the horizontal component of the anchor force (P_{0h}) is calculated by ensuring equilibrium of the design values of horizontal actions and resistances.

The vertical equilibrium of the wall is finally checked by adjusting the design value of the wall–ground interface parameter (δ_a) on the active side, i.e. by calculating a factor (m) such that

$P'_{ah} \tan m\delta_a + F_h \tan \beta = P'_{ph} \tan \delta_p$

where P'_{ah} and P'_{ph} are the resultant horizontal active and passive earth pressure forces on the wall (all quantities in the equation enter with their design values). It is noted that the wall–ground interface parameter (δ_p) on the passive side is not adjusted since the wall tends to move downwards and thus tends to reduce the friction on the active side only. In the unlikely case that the calculated m value is greater than 1, then m is set equal to 1, and the parameter δ_p is reduced until equilibrium is verified (since in this case the wall moves upwards and reduces the friction on the passive side).

Table 9.6 lists the main results of the ULS calculations based on the Eurocode Design Approaches and the OFS method with an OFS of 2.0 on passive earth pressure (i.e. passive earth pressure is reduced to 50% of its characteristic value). The design values of bending moments and shear forces listed in this table were determined from the design values of the earth and water pressures and support reactions.

Table 9.6. Example 9.2 – ULS design by LEM (except for step 2 of DA-1 Combination 1)

	DA-1					
	Comb. 1[a]		Comb. 2			
	Step 1	Step 2		DA-2	DA-3	OFS[b]
Required wall embedment, *d*, below maximum excavation (m)	5.89	6.62	6.62	7.89	6.62	8.27
Required length of sheet pile wall (m)	11.29	12.02	12.02	13.29	12.02	13.67
Characteristic value of pore water pressure (kPa)						
Elevation –1.0 m (active side) and –5.40 m (passive side)	0	0	0	0	0	0
Elevation –4.0 m (active side)	30	30	30	30	30	30
Elevation –5.4 m (active side)	39.3	39.3	39.8	40.4	39.8	40.6
Toe of wall (both sides)	78.6	78.6	86.1	99.1	86.1	103.0
Characteristic value of the net water pressure (kPa)						
From elevation 0.0 to –1.0 m	0	0	0	0	0	0
Elevation –4.0 m	30	30	30	30	30	30
Elevation –5.4 m	39.3	39.3	39.8	40.4	39.8	40.6
Toe of wall	0	0	0	0	0	0
Design value of total horizontal thrust on the active side, $P'_{ah} + P_w$ (kN/m)	662.4		638.9	858.6	638.9	660.3
Design value of total horizontal resistance on the passive side P'_{ph} (kN/m)	475.1		466.9	630.1	466.9	486.9
Design value of the horizontal component of the anchor force, P_{0h} (kN/m)		167.0	172.0	228.5	172.0	173.4
Design value of the anchor force, $P_0 = P_{0h}/\cos b$ (kN/m)		169.6	174.6	232.1	174.6	176.1
Design value of the overturning (and the resisting) moments with respect to the anchorage level (kN m/m)			4021.1	5951.9	4021.1	4722.8
Design value of total vertical thrust on the active side, P_{av}' (kN/m)			42.3	83.2	42.3	65.2
Design value of total vertical resistance on the passive side P'_{pv} (kN/m)			72.3	123.2	72.3	95.6
Maximum bending moment in wall						
Design value, $M_{max,\,d}$ (kN m/m)		347.0	446.7	649.5	446.7	706.4
Elevation (m)		–5.40	–5.40	–5.40	–5.40	–6.04
Maximum shear force in wall						
Design value, S_d (kN/m)			159.1	215.7	159.1	164.2
Elevation (m)			–1.00	–1.00	–1.00	–1.00

[a] The two calculation steps for DA-1 Combination 1 are first to determine the minimum wall penetration (embedment) depth and then, in a separate calculation (using a soil spring model), to determine the internal forces and the anchor force

[b] In the OFS method, all values are 'nominal' (characteristic) values

DA-1 Combination 1 – step 2

In DA-1, as the wall penetration obtained from Combination 2 is larger than for Combination 1 (as is usually the case), a separate calculation (step 2) is performed with the Combination 1 partial factors and the wall penetration $d = 6.62$ m, determined with the Combination 2 partial factors as shown in Table 9.6. As the wall penetration is now greater than that required for the full mobilization of the limiting earth pressures with the Combination 1 partial factors ($d = 6.62$ m > 5.89 m), a wall–ground interaction model is required to calculate the mobilized fraction of the limiting earth pressures. The interaction model used in this example is a spring model, as discussed in Section 9.7. The spring model gives the following results:

- Design value of the horizontal component of the anchor force:

  $P_{0h} = \mathbf{1.35} \times 123.7 = 167.0$ kN/m

- Design value of the maximum bending moment in the wall for DA-1 Combination 1:

  $M_{\max,\,d} = \mathbf{1.35} \times 257 = 347$ kN m/m $< M_{u,\,d} = 675$ kN m/m

Note that when it is obvious that step 1 of DA-1 requires a smaller wall penetration than DA-1 Combination 2, step 2 can be performed readily after calculating the wall penetration using DA-1 Combination 2.

Table 9.6 leads to the following conclusions:

(1) In DA-1, Combination 2 provides the wall penetration depth (6.62 m). Combination 2 is also critical for the structural design of the wall (maximum bending moment = 446.7 kN m/m).
(2) DA-3 gives identical results to DA-1 Combination 2.
(3) DA-2 is the most conservative of the Eurocode Design Approaches as it gives the greatest wall penetration (7.89 m) and the largest design bending moment (649.5 kN m/m). The OFS method gives even deeper wall penetration (8.27 m) and a slightly larger comparable design bending moment ($1.4 \times 504.6 = 706.4$ kN m/m).
(4) The Frodingham 3N sheet pile section has sufficient ultimate moment of resistance ($M_{u,\,d} = 675$ kN m/m) to resist the calculated design bending moments in DA-1 and DA-3; a slightly heavier sheet pile section is required in DA-2 and in the OFS method ($M_{u,\,d} \geq 649.5$ kN m/m and $M_{u,\,d} \geq \mathbf{1.4} \times 504.6 = 707$ kN m/m, respectively).

DA-2 – use of an LEM

In the above application of DA-2 using the LEM, partial factors for actions are applied at the source, i.e. on the limiting active earth pressure and the net water pressure.

The following equivalent alternative procedure can be used, called DA-2*:

(1) Permanent actions (e.g. limiting active earth pressure due to the soil weight and net water pressure) enter the calculation with values equal to their characteristic values (i.e. using unit partial factors). Soil parameters (i.e. shear strength) also enter the calculation with values equal to their characteristic values, as usual for DA-2.
(2) Unfavourable variable actions (e.g. limiting active earth pressure due to the surface surcharge) enter the calculation multiplied by **1.5/1.35** = 1.11, i.e. $q_d = 1.11$ and $q_k = 11.1$ kPa.
(3) The overturning moment (M_E) is calculated, which is the sum of the moments of the active earth pressure and the net water pressure (sum = E_k) with respect to the anchorage point. The corresponding design value is then calculated: $M_{Ed} = \mathbf{1.35} M_E$. This is the design value of the effect of the actions for use in the ULS design.
(4) The horizontal component of the limiting earth resistance ($R_{p,\,k}$) is calculated, as is the stabilizing moment (M_R) of $R_{p,\,k}$ with respect to the anchorage point. The

corresponding design value is then calculated: $M_{Rd} = M_R/\mathbf{1.4}$. This is the design value of the stabilizing moment for use in the ULS design calculation.

(5) The wall embedment is determined from the ULS requirement that $M_{Ed} \leq M_{Rd}$, or, equivalently, $M_E \leq M_R/(\mathbf{1.35} \times \mathbf{1.4}) = M_R/1.89$.

(6) After calculation of the required wall embedment, the characteristic value of the anchor force is determined by checking the horizontal equilibrium of the actions and resistances.

(7) Finally, the characteristic values of the bending moments along the wall are calculated from the known actions, anchor force and earth pressure forces. The design values of the anchor force and bending moments are obtained by multiplying the corresponding characteristic values by **1.35**.

In this example, DA-2* gives the following results:

- Embedment depth $d = 7.89$ m.
- Resultant active earth pressure and net water pressure force $E_k = 636.0$ kN/m.
- Overturning moment of E_k with respect to the anchorage point $M_E = 4408.8$ kN m/m.
- Design value of the overturning moment $M_{Ed} = \mathbf{1.35} \times 4408.8 = 5951.9$ kN m/m.
- Characteristic value of the horizontal component of the earth resistance $R_k = 882.1$ kN/m.
- Stabilizing moment due to the earth resistance $M_R = 8335.3$ kN m/m.
- Design value of the stabilizing moment $M_{Rd} = 8335.3/\mathbf{1.4} = 5953.8$ kN m/m.
- Thus, $M_{Ed} = 5952$ kN m/m $\leq M_{Rd} = 5954$ kN m/m.

Calculation of the horizontal component of the anchor force (P_{0h}):

- Design value of $P_{0h} = \mathbf{1.35} \times E_k - R_k/\mathbf{1.4} = \mathbf{1.35} \times 636.0 - 882.1/\mathbf{1.4} = 228.5$ kN/m.
- Characteristic value of $F_h = 228.5/\mathbf{1.35} = 169.3$ kN/m.

- Characteristic value of the maximum bending moment = 481.14 kN m/m.
- Design value of the maximum bending moment $M_d = \mathbf{1.35} \times 481.14 = 649.5$ kN m/m.

Thus, DA-2 and DA-2* when using the LEM give the same value of the bending moments (see Table 9.6).

In conclusion, DA-2 and DA-2* give exactly the same results in this worked example. This is because the calculations are linear.

In the previous analyses (DA-1 Combination 2, DA-2, DA-2* and DA-3), the minimum required wall penetration depth, bending moments and shear forces along the wall are calculated with the LEM, i.e. from the limiting earth pressure on the active side of the wall, without any pressure redistribution to account for wall deflections possibly smaller than those required for the full mobilization of the limiting earth pressure. Such pressure redistribution can be analysed with interaction models (finite-element or beam with spring models) as discussed in Section 9.7.

Spring models, as discussed in Section 9.7, can be used for all three Design Approaches. The application of a spring model (with the input parameters given above) is illustrated in this example for DA-2, and DA-1 Combination 1 as follows.

DA-2 – use of a spring model

(1) The minimum embedment depth of the wall is determined with the standard calculation presented above using limiting earth pressures (LEM). This calculation gives a design which is safe against failure on the passive side of the wall. The calculated minimum embedment for DA-2 is $d = 7.89$ m (see above). Alternatively, one can search by trial and error to determine the embedment of the wall leading to mobilization of 53% of the characteristic earth resistance (since $1/\gamma_G\gamma_{Re} = 1/(\mathbf{1.35} \times \mathbf{1.4}) = 0.53$ using the recommended values).

(2) The spring model is employed to analyse the wall with the above embedment depth and determine the internal forces and the anchor force and to check that

Table 9.7. Example 9.2 – ULS design: results for DA-2 using the spring model

	Calculated value	Design value = **1.35** × calculated value
Embedment depth	From step 1: d = 7.89 m	–
Mobilized earth resistance	0.53[a] ≤ 1/(**1.35** × **1.4**) = 0.53	–
Bending moment	209.5 kN m/m	**1.35** × 209.5 = 283 kN m/m
Anchor force	116.0 kN/m	**1.35** × 116.0 = 157 kN/m

[a] Corrected anchor force accounting for active pressures on the back of the wall

Table 9.8. Example 9.2 – ULS design: results for DA-1 Combination 1 using the spring model (wall length from DA-1 Combination 2)

	Calculated value	Design value = **1.35** × calculated value
Embedment depth	From step 1: d = 6.62 m	–
Mobilized earth resistance	0.60[a] < 1/**1.35** = 0.74	–
Bending moment	257 kN m/m	**1.35** × 257 = 347 kN m/m
Anchor force	126 kN/m	**1.35** × 126 = 170 kN/m

[a] Corrected accounting for active pressures at the back of the wall

the mobilization of the characteristic earth resistance does not exceed 53% (1/(**1.35** × **1.4**) = 0.53). It should be pointed out that greater wall penetration could also be used in this analysis (e.g. if the wall has to penetrate to an impervious layer). The characteristic values of the stiffness and strength parameters for the ground and the wall are used in the analysis. The surface load (q) is input with a value q = **1.5** × 10/**1.35** = 11.1 kPa. The calculated bending moments and anchor forces are then multiplied by the partial factor for permanent unfavourable actions (**1.35**) to determine their design values. The main calculation results are presented in Table 9.7.

The design values of bending moments and anchor reactions obtained using the spring model for DA-2 are much lower than the values obtained using the LEM (see Table 9.6). This is due to the fact that the spring model uses characteristic values of the earth resistance, and the partial factors on the earth resistance are only introduced at the end to check the mobilization level.

DA-1 Combination 1 – use of a spring model

(1) The minimum embedment depth of the wall is determined with the standard calculation (LEM) for DA-1 Combination 2. The calculated minimum embedment for DA-1 Combination 2 is d = 6.62 m (see above).

(2) The spring model is employed to analyse the wall with the above embedment depth and determine the internal forces and the anchor force and to check whether the mobilization of the characteristic earth resistance does not exceed 0.74 = 1/**1.35**. The surface load (q) is introduced with a value q = **1.5** × 10/**1.35** = 11.1 kPa. The calculated bending moments and anchor forces are then multiplied by the partial factor for permanent unfavourable actions (**1.35**) to determine their design values. The main calculation results are presented in Table 9.8.

The equivalent OFS of DA-1 against passive failure is about 1.6, and about 1.9 in DA-2. The bending moments and anchorage reactions calculated using the

spring model for DA-1 Combination 1 are larger than for DA-2 because the wall is somewhat longer in DA-2.

Note that, in all interaction models, the calculated bending moments and support reactions depend on the selected value of the soil stiffness (spring stiffness) relative to the wall and anchor stiffness. As soil stiffness involves appreciable uncertainty, the sensitivity of the design to variations of the stiffness parameters should be checked. For a given wall length, low values of the soil spring stiffness combined with high values of the wall stiffness result in higher bending moments in the wall.

It should be pointed out that the above conclusions are relevant for this particular example only. In other examples, involving different wall geometries and ground parameters, the corresponding conclusions may be different.

ULS design of excavation against failure by hydraulic heave

Upward groundwater seepage towards the bottom of a deep excavation may cause failure by hydraulic heave in soils with relatively uniform permeability, and failure by hydraulic uplift in cases where a low permeability layer overlies a high permeability layer. Although failure by hydraulic heave is more relevant in high-permeability soils, as steady state seepage is established relatively quickly, designing against heave is performed in the present example (stiff clay), mainly for illustrative purposes. The methodology adopted to design against hydraulic heave is discussed in Chapter 10.

The hydraulic heave calculation model usually involves examining a thin ground column between the bottom of the excavation and the elevation of the toe of the wall, neglecting the lateral frictional forces (conservative assumption). In this example, the design against failure by hydraulic heave is performed for the shortest embedment depth (d = 6.62 m) determined by DA-1 and DA-3.

According to *clause 2.4.7.5*, one inequality for designing against failure by hydraulic heave involves checking that, at the bottom of any ground column, the design value of the destabilizing pore water pressure $u_{\mathrm{dst,\,d}}$ is less than the design value of the stabilizing total vertical stress $\sigma_{\mathrm{stb,\,d}}$ (see Fig. 9.6 for a definition of the symbols), i.e.

$$u_{\mathrm{dst,\,d}} \leq \sigma_{\mathrm{stb,\,d}} \qquad (2.9a)$$

Another inequality for designing against failure by hydraulic heave involves checking that the design value of the destabilizing seepage force $S_{\mathrm{dst,\,d}}$ in the ground column is less than the design value of the stabilizing buoyant (i.e. effective) weight $G'_{\mathrm{stb,\,d}}$ of the ground column, i.e.

$$S_{\mathrm{dst,\,d}} \leq G'_{\mathrm{stb,\,d}} \qquad (2.9b)$$

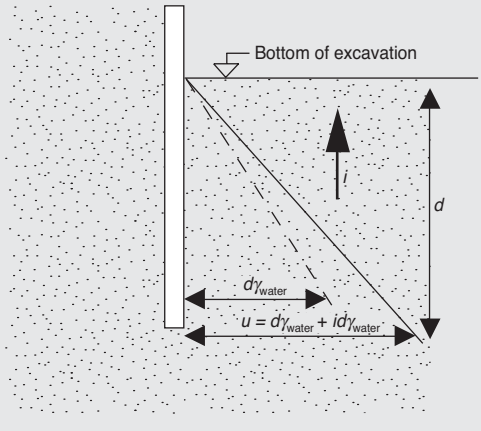

Fig. 9.6. Definition of symbols in the design against hydraulic heave

Inequality (*2.9b*) gives

$$S_{\text{dst, d}} = \gamma_{\text{G, dst}}\gamma_{\text{water}} id \leq \gamma_{\text{G, stb}}(\gamma_{\text{k}} - \gamma_{\text{water}})d = G'_{\text{stb, d}}$$

where i is the characteristic value of the hydraulic gradient, d is the height of the ground column up to the level where heave failure is checked (Fig. 9.6), γ_{water} is the characteristic value of the weight density of the water, γ_{k} is the characteristic value of the total weight density of soil layer B, $\gamma'_{\text{k}} = \gamma_{\text{k}} - \gamma_{\text{water}}$ is the characteristic value of the buoyant (effective) weight density of soil layer B, and $\gamma_{\text{G, stb}}$ and $\gamma_{\text{G, dst}}$ are appropriate partial factors for stabilizing and destabilizing actions (see *Table A.17*).

The pore water pressure at the elevation of the toe of the wall (elevation –5.40 – 6.62 = –12.02 m) is calculated assuming a linear hydraulic head loss in layer B, as explained previously (length of seepage path: $L = 2\text{d} + 1.40 = 2 \times 6.62 + 1.40 = 14.64$ m). This assumption gives an upward hydraulic gradient:

$$i = \Delta\text{H}/L = (-1.0 + 5.40)/14.64 = 0.30$$

The recommended values of the partial factors for hydraulic heave are (*Table A.17*)

$$\gamma_{\text{G, stb}} = \mathbf{0.9} \qquad \gamma_{\text{G, dst}} = \mathbf{1.35}$$

Application of the above methodology of *inequality* (*2.9b*) gives

$$\gamma_{\text{G, dst}}\gamma_{\text{water}} id \leq \gamma_{\text{G, stb}}(\gamma_{\text{k}} - \gamma_{\text{water}})d$$

$$\Rightarrow \mathbf{1.35} \times 10 \times 0.30 \times 6.62 \leq \mathbf{0.90} \times (20 - 10) \times 6.62$$

$$\Rightarrow 26.8 \text{ kPa} \leq 59.6 \text{ kPa}$$

indicating that safety against failure by hydraulic heave is sufficient.

Note: *inequality* (*2.9a*) gives a result which is not the same as that given by *inequality* (*2.9b*):

$$u_{\text{dst, d}} \leq \sigma_{\text{stb, d}} \Rightarrow \gamma_{\text{G, dst}} u_{\text{k}} \leq \gamma_{\text{G, stb}}\sigma_{\text{k}}$$

$$\Rightarrow \gamma_{\text{G, dst}}(\gamma_{\text{water}} d + \gamma_{\text{water}} id) \leq \gamma_{\text{G, stb}}\gamma_{\text{k}} d$$

$$\Rightarrow \gamma_{\text{G, dst}}\gamma_{\text{water}} id \leq (\gamma_{\text{G, stb}}\gamma_{\text{k}} - \gamma_{\text{G, dst}}\gamma_{\text{water}})d$$

$$\Rightarrow \mathbf{1.35} \times 10 \times 0.30 \times 6.62 \leq (\mathbf{0.9} \times 20 - \mathbf{1.35} \times 10) \times 6.62$$

$$\Rightarrow 26.8 \text{ kPa} \leq 29.8 \text{ kPa}$$

In this example, *inequality* (*2.9a*) also indicates sufficient safety against failure by hydraulic heave (but with greater safety, because of the more stringent requirement on the design excess pore water pressure $\gamma_{\text{G, dst}}\gamma_{\text{water}} id = 26.8$ kPa). For a discussion about the differences between *inequalities* (*2.9a*) and (*2.9b*), see Chapter 10.

SLS design against wall deflections

The procedure for the SLS design against wall deflections is briefly described in *clause 9.8.2*. It consists of obtaining a cautious estimate of the wall deflection and the resulting ground displacements on the basis of comparable experience, and, if the limiting acceptable values are exceeded, a more detailed investigation is performed by carrying out rigorous calculations (see also the discussion in Section 9.8.2). This implies that, in many SLS designs, calculations of wall deflections and ground displacements may be avoided if comparable experience is available.

In this example, wall deflections in the SLS are calculated using a one-dimensional analytical model that includes the ground interaction with the wall. The wall is considered as a vertical beam, with the properties of the sheet pile and the ground (on both sides of the wall) modelled as a series of elasto-plastic springs yielding at the active and passive earth pressures, as shown in Fig. 9.7. The stiffness of the soil springs is obtained by

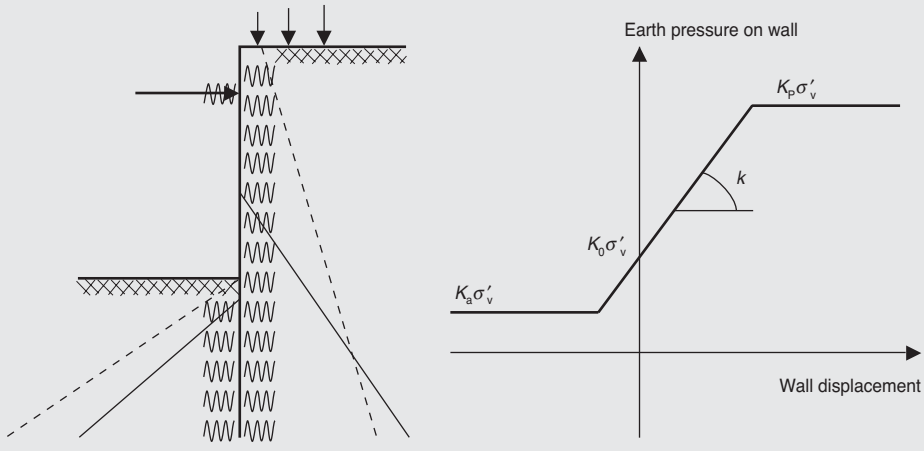

Fig. 9.7. Model for the SLS design of an embedded wall with wall–ground interaction. The earth pressure distribution on the active side develops by elasto-plastic soil springs

Table 9.9. Example 9.2 – SLS design (all values are equal to the characteristic values)

	DA-1 Combination 2	DA-2	DA-3
Wall penetration below the maximum excavation base (m)	**6.62**	**7.89**	**6.62**
Total length of the sheet pile wall (m)	**12.02**	**13.29**	**12.02**
Horizontal component of the prestressing (lock-off) force (kN/m)	100	100	100
Final horizontal component of the anchor force (kN/m) after completion of the excavation	112	112	112
Calculated wall deflection (mm)			
Elevation 0.0 m	–2.6	2.6	–2.6
Elevation –1.0 m	6.1	5.8	6.1
Elevation –3.0 m	22	21	22
Elevation –5.0 m	27.7	26	27.7
Elevation –7.0 m	21	21	21
Elevation –9.0 m	13	13	13
Toe	5.5	7	5.5
Calculated maximum bending moments (kN m/m)	172	168	172

considering the wall movement required to mobilize the active and passive earth pressures (see *clause C.3* in *Annex C*). The design values of all actions, resistances and ground parameters, and wall and anchor stiffnesses are equal to their characteristic values. As the model includes soil springs on the active side, no assumption is required about the earth pressure distribution on the active side. The net water pressure difference is considered as a known action. The anchorage is simulated as a prestressed elastic spring with the stiffness determined by the ULS design. The main calculation results are summarized in Table 9.9.

As the model is one-dimensional, it does not allow the ground displacements behind the wall to be calculated directly in order to check the serviceability conditions of any supported structures and utilities. Such estimates would require a two- or three-dimensional numerical model (e.g. using finite elements), as discussed in Section 9.8.2. Alternatively, indirect methods may be used to convert the calculated horizontal wall deflections in ground surface settlements.

The main calculation results are summarized in Table 9.9.

CHAPTER 10

Hydraulic failure

This chapter deals with the designs against the different types of hydraulic failure. The material described in this chapter is covered by *Section 10* of EN 1997-1, together with the partial factors in *Annex A*. The structure of this chapter follows that of *Section 10*:

10.1. General

Section 10 of Eurocode 7 begins by listing the modes of hydraulic failure covered by the code, which must be checked: *Clause 10.1(1)P*

- failure by uplift
- failure by heave
- failure by internal erosion
- failure by piping.

Definitions are then provided for these hydraulic failure modes, as the terms used for them and their meaning can differ from country to country.

Table 10.1 summarizes the types of failure and how they are designed against.

Hydraulic gradients, pore pressures and seepage forces are the predominant actions to be considered in designs against hydraulic failures. For this reason, special attention has to be given to those parameters which have the greatest influence on the actions due to the water, which are: *Clause 10.1(3)P*

Table 10.1. Summary of the design procedures for different types of hydraulic failure

Type of failure	ULS	Basic inequality	Table of recommended partial factor values	Equivalent global safety factor
Uplift	UPL	*Expression* (2.8)	*Tables A.15* and *16*	1.10
Heave	HYD	*Expression* (2.9)	*Table A.17*	1.50
Internal erosion	–		Filter criteria	
Piping	–	Determine flownet or the distribution of the hydraulic gradient for possible adverse ground conditions and check for failure by hydraulic heave (for horizontal ground) or by slope failure (for inclined ground)		

- the variation of soil permeability in time and space
- variations in water levels and pore water pressure in time
- modifications in the geometry.

An example illustrating that different soil conditions can result in different failure mechanisms is shown in Fig. 10.1. When a stratum of, for example, varved clay of low permeability is situated below the level of excavation, there will be practically no groundwater flow, and it must be verified that there is sufficient safety against uplift of the stratum of low permeability. If, instead, the ground below the excavation is permeable (e.g. sand), groundwater will flow upwards into the excavation, and it must be checked that failure by heave of the ground below the excavation is avoided.

Design situations involving uplift, where there is no seepage of water, should be analysed using the partial factors for the UPL ultimate limit state in *Tables A.15* and *A.16* in *Annex A.4*. Design situations where there is seepage due to hydraulic gradients should be analysed using the partial factors for the HYD ultimate limit state in *Table A.17* in *Annex A.5*.

10.2. Failure by uplift (UPL)

10.2.1. General

Clause 10.2(1)P Failure by uplift is checked by comparing the sum, $G_{dst,\,d}$ and $Q_{dst,\,d}$, of the design values of the destabilizing permanent and variable vertical actions, i.e. the sum of the water pressures under the structure (permanent and variable parts) and any other upwards forces, with the sum, $G_{stb,\,d}$ and R_d, of the design values of the stabilizing permanent vertical actions and the design value of any additional resistance to uplift provided, for example, by tension piles, ground anchorages or friction forces on the side of a buried structure:

Clause 2.4.7.4(1)P

$$G_{dst,\,d} + Q_{dst,\,d} \leq G_{stb,\,d} + R_d \qquad (2.8)$$

This general inequality is applied when checking the stability of submerged structures against uplift failure and the stability against uplift failure of impermeable layers in excavations. The design procedure for a structure where tension piles are required to provide additional stabilizing resistance is presented in a worked example in this guide (see Example 7.5). For persistent and transient situations, the values of the partial factors on the destabilizing and stabilizing actions should be selected from *Table A.15*, and the values of the partial factors on the ground strength parameters or the resistance of geotechnical elements should be selected from *Table A.16*.

Clause 2.4.7.4(3)P

Clause 2.4.7.4(2) According to *clause 2.4.7.4*(*2*), the additional resistance to uplift due to tension piles, ground anchors or friction forces may be treated as a stabilizing permanent vertical action

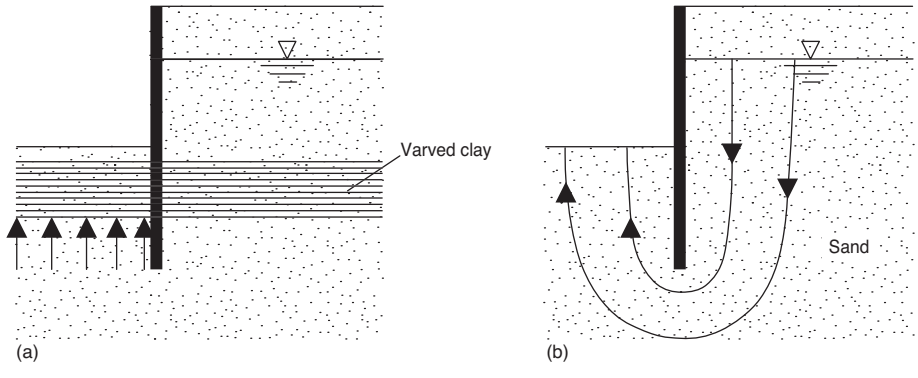

Fig. 10.1. Examples of hydraulic failure mechanisms due to different soil conditions: (a) failure by uplift and (b) failure by heave

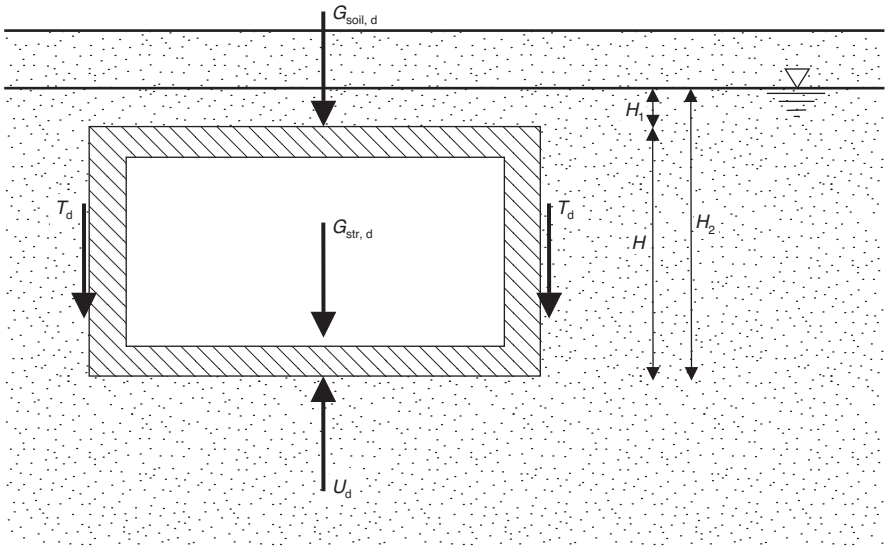

Fig. 10.2. Tunnel below the groundwater table

rather than as a resistance, and hence the design value will be obtained by applying the partial factor on permanent favourable actions to it (of which the recommended value is 0.9). If this procedure is adopted and the partial factor values on actions recommended in *Table A.15* are applied, the resulting UPL design will be less conservative than if the partial soil parameter values in *Table A.16* are applied to the additional resistance. This is because applying the partial factor in *Table A.16* to the additional tensile pile resistance is equivalent to multiplying the resistance by 0.71 (or, in the case of friction forces, to multiplying the ground strength parameters by 0.8). It is clear from this that, if *clause 2.4.7.4*(*2*) is applied in the case of the resistance from tension piles, ground anchors or friction, then the GEO ultimate limit state should also be checked.

10.2.2. Submerged structures

As an example of a design against failure by uplift, it may be useful to consider a tunnel completely below the groundwater level, as illustrated in Fig. 10.2. With the design values of the destabilizing uplift action U_d of the water and the design values of the stabilizing actions of the weight $G_{str, d}$ of the structure, the weight $G_{soil, d}$ of the ground on top of the structure and the side friction force T_d on the vertical walls, *inequality* (*2.8*) becomes

$$U_d \leq G_{str, d} + G_{soil, d} + T_d \tag{D10.1}$$

If a structure is completely below the groundwater level, the water pressure acting on the top of the structure could be regarded as a stabilizing action and the water pressure acting on the bottom as a destabilizing action. As the stabilizing and destabilizing actions are multiplied by different partial factor values, the safety against uplift would then depend on the water depth above the structure. Therefore, the principle described in the note to *clause 2.4.2*(*9*)*P* may be applied in this situation: that is, a single partial factor may be applied to the difference between these actions, i.e. to the difference between the characteristic permanent actions of the water pressure acting on the top and the bottom of the structure. The difference between the characteristic destabilizing actions due to the water pressures is

Clause 2.4.2(9)P

$$U_K = \gamma_w(H_2 - H_1)A = \gamma_w HA \tag{D10.2}$$

where A is the base area of the tunnel and the other symbols are as illustrated in Fig. 10.2. The design value of the destabilizing actions is then

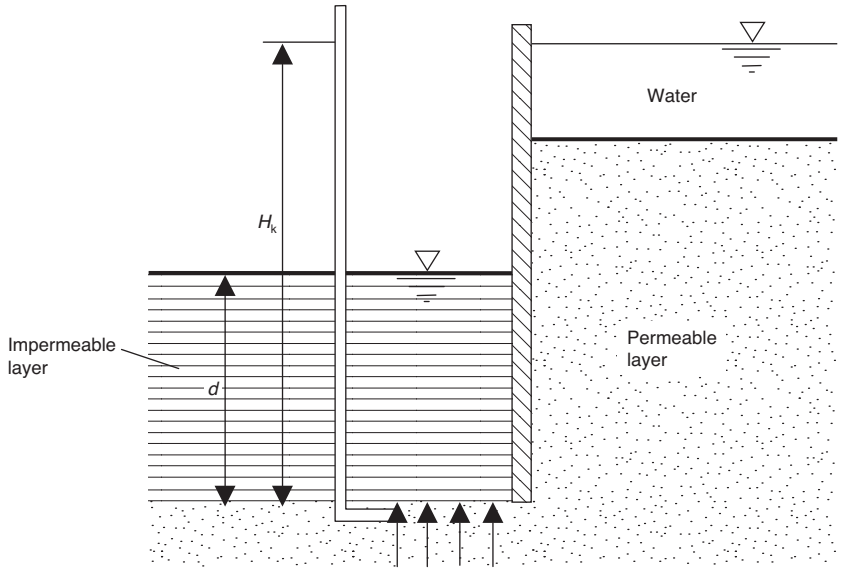

Fig. 10.3. Uplift of an impermeable layer

$$U_d = \gamma_{G,\,dst}\gamma_w HA \tag{D10.3}$$

It should be noted that, when calculating the stabilizing action, the weight of the soil below the groundwater level should be calculated using the effective weight density γ' of the soil.

As indicated in inequality (D10.1), friction forces, e.g. on the walls of submerged structures, may be taken into account. They can be derived from

$$T_d/A = K\sigma'_v \tan \delta_d \tag{D10.4}$$

The wall friction angle δ_d should be determined by dividing tan δ_k by γ_φ from *Table A.16* to obtain a conservative low friction force. If K, the coefficient of earth pressure, is calculated from the angle of shearing resistance φ', an appropriately cautious value should be selected for φ'.

10.2.3. Design against uplift of an impermeable layer

If friction forces are neglected, the design against uplift of an impermeable layer where there is no seepage through the layer, e.g. at the bottom of, or below, an excavated building pit (Fig. 10.3), can use stresses instead of forces. In this case, the design value of the destabilizing total water pressure u_d acting at the interface between the two layers must be less than or equal to the stabilizing total vertical stress $\sigma_{stb,\,d}$ due to the total weight of soil above the interface

$$u_{dst,\,d} \leq \sigma_{stb,\,d} \tag{D10.5}$$

Using the partial factors specified in *Table A.15* and the symbols of Fig. 10.3, *inequality* (*2.8*) for design failure by uplift becomes

$$\gamma_{G,\,dst}\gamma_w H_k \leq \gamma_{G,\,stb}\gamma_d \tag{D10.6}$$

Using the values for the partial factors given in *Annex A.4*, the method of EN 1997-1 is equivalent to an overall factor of safety (OFS) against uplift given by

$$\text{OFS} = \gamma_{G,\,dst}/\gamma_{G,\,stb} = 1.00/0.90 = 1.11 \tag{D10.7}$$

10.2.4. Worked example of a design against uplift

An example of a design against uplift of a structure with tension piles is presented in Example 7.5 of this guide.

10.3. Failure by heave (HYD)

10.3.1. General

Failure by heave occurs when upward seepage forces acting against the weight of the soil become so strong that the vertical effective stress is reduced to zero. According to *clause 2.4.7.5(1)P* the stability of soil against heave must be checked for every relevant soil column either by a calculation in terms of pore water pressures and total stresses (*inequality* (*2.9a*)) or by a calculation in terms of seepage forces and submerged weight (*inequality* (*2.9b*)). The left side of the retaining wall in Fig. 10.4 illustrates an example of failure by heave. In the following, any vertical friction forces (stabilizing) have been neglected.

Clause 10.1(1)P
Clause 2.4.7.5(1)P

10.3.2. Design using total stresses

When designing against seepage using total stresses it is necessary to check that the design value of the destabilizing total pore pressure $u_{d,\,dst}$ at the bottom of the column is less than or equal to the design value of the stabilizing total vertical stress $\sigma_{d,\,stb}$:

Clause 10.3(1)

$$u_{d,\,dst} \leq \sigma_{d,\,stb} \qquad (2.9a)$$

For the conditions on the left side in Fig. 10.4, the characteristic value of the destabilizing water pressure at the toe of the wall is

$$u_{k,\,dst} = \gamma_w(d + d_w + \Delta h) \qquad (D10.8)$$

The characteristic value of the stabilizing total stress at the toe of the wall is

$$\sigma_{k,\,stb} = (\gamma' + \gamma_w)d + \gamma_w d_w \qquad (D10.9)$$

Applying the partial factors $\gamma_{G,\,dst}$ and $\gamma_{G,\,stb}$ to the destabilizing and stabilizing permanent stresses, *inequality* (*2.9a*) becomes

$$\gamma_{G,\,dst} u_{k,\,dst} \leq \gamma_{G,\,stb}\sigma_{k,\,stb} \qquad (D10.10)$$

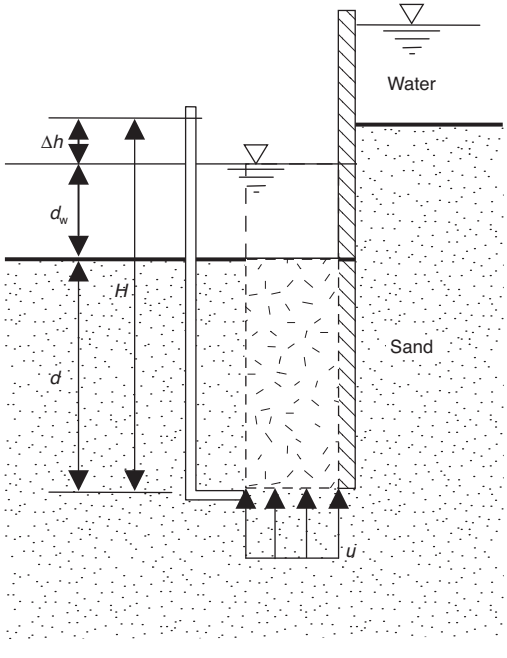

Fig. 10.4. Hydraulic heave under hydrodynamic conditions

i.e.

$$\gamma_{G,\,dst}\gamma_w(d + d_w + \Delta h) \leq \gamma_{G,\,stb}[(\gamma' + \gamma_w)d + \gamma_w d_w] \quad \text{(D10.11)}$$

and, hence, using *inequality* (*2.9a*), the design excess pore water pressure is

$$\gamma_{G,\,dst}\gamma_w\,\Delta h \leq \gamma_{G,\,stb}\gamma' d - (\gamma_{G,\,dst} - \gamma_{G,\,stb})\gamma_w(d + d_w) \quad \text{(D10.12)}$$

Using the recommended values of $\gamma_{G,\,dst}$ and $\gamma_{G,\,stb,}$ equal to 1.35 and 0.9, respectively, in the second component of the right-hand side of the above inequality yields

$$\gamma_{G,\,dst}\gamma_w\,\Delta h \leq \gamma_{G,\,stb}\gamma' d - 0.45\gamma_w(d + d_w) \quad \text{(D10.13)}$$

10.3.3. Design using submerged weight

When designing against seepage using submerged (effective) weights, it is necessary to check that the design value of the destabilizing seepage force $S_{dst,\,d}$ acting within the soil column is less than or equal to the design value of the stabilizing submerged weight $G'_{stb,\,d}$ of the soil column:

$$S_{dst,\,d} \leq G'_{stb,\,d} \quad (2.9b)$$

For the hydraulic situation shown on the left in Fig. 10.4, the design value of destabilizing seepage force is

$$S_{dst,\,d} = \gamma_{dst,\,d}\gamma_w i d \quad \text{(D10.14)}$$

where i is the hydraulic gradient in the soil column. With $i = \Delta h/d$, the design value of the destabilizing seepage force becomes

$$S_{dst,\,d} = \gamma_{G,\,dst}\gamma_w\,\Delta h \quad \text{(D10.15)}$$

With the design value of stabilizing submerged weight,

$$G'_{stb,\,d} = \gamma_{G,\,stb}\gamma' d \quad \text{(D10.16)}$$

inequality (*2.9b*) becomes

$$\gamma_{G,\,dst}\gamma_w\,\Delta h \leq \gamma_{G,\,stb}\gamma' d \quad \text{(D10.17)}$$

Comparing inequalities (D10.13) and (D10.17), it is seen that the design, i.e. allowable, excess pore water pressure, $\gamma_{G,\,dst}\gamma_w\,\Delta h$, calculated using *inequality* (*2.9a*) is always smaller than the value calculated using *inequality* (*2.9b*) by the amount $0.45\gamma_w(d + d_w)$. Hence, *inequality* (*2.9a*) provides greater safety than *inequality* (*2.9b*). This is shown by the calculations in Example 9.2, where the two inequalities are used to analyse heave. *Inequality* (*2.9b*) is the inequality normally used when designing against hydraulic failure; however, in some situations, *inequality* (*2.9a*) may be preferred.

10.3.4. Determination of the relevant pore water pressure

Clause 10.3(2)P The pore water pressure distribution is influenced very strongly by the permeability conditions of the ground. Small changes in the permeability, e.g. thin layers of low permeability soil, may change the pore water distribution dramatically. As a consequence of this, a realistic and safe assessment of the hydraulic conditions and the subsequent determination of the pore water pressure distribution form the most important part of the design. The most reliable way to assess the hydraulic conditions is to check the assumed distribution by taking pore pressure measurements. If no measurements can be performed, the assumed hydraulic conditions should be on the safe side, which may often result in a very conservative and costly design.

Clause 10.3(2)P Spatial effects originating from, for example, the edges of rectangular excavations or impermeable structures in dams should be considered very carefully since only three-dimensional numerical simulations of the groundwater flow combined with measurements can give a realistic and safe assessment of the situation in such cases.

10.3.5. Worked example of a design against failure by heave

A worked example of a design against failure by heave is given in Example 9.2 of this guide.

10.3.6. Discussion on failure by uplift and failure by heave

When comparing the partial factors for failure by uplift and failure by heave in *Tables A.15* and *A.17*, it is found that the value of the partial factor on unfavourable permanent actions for uplift (1.0) is considerably smaller than that for heave (1.35). Looking at Fig. 10.3, where an example of a design against uplift of an impermeable layer is shown, the question arises as to when is the layer 'sufficiently' impermeable that design against failure by uplift (UPL), with a smaller factor on unfavourable permanent actions, is relevant and when must the design be against failure by hydraulic heave (HYD), using the higher partial factor on unfavourable permanent actions.

With respect to their hydraulic properties, cohesive soils may be regarded as impermeable. When subjected to pore water pressure in excess of hydrostatic, a stiff cohesive layer will not disintegrate into small grains. Therefore, a cohesive layer may be regarded as a compact impermeable block, and the partial factors for the UPL limit state may be applied to the favourable and unfavourable actions on this block The basis for deciding which type of limit state, UPL or HYD, is relevant in this situation depends on whether or not the layer can be regarded as being an impermeable block due to its low permeability and cohesive strength. In cases of doubt, both limit states should be investigated.

10.4. Internal erosion

10.4.1. Filter criteria and hydraulic criteria

Clause 10.4(1)P

The procedure for designing against failure due to internal erosion, which is material transport caused by seepage, will normally consist of a sequence of checks. Initially, it is necessary to check if the geometry of the grain structure and the voids will prevent the transport of fine particles by seepage. This can be investigated by checking if the filter criteria are satisfied, either by the soil layer itself (Cistin, 1967) or at the interface between two soil layers (e.g. Sherard *et al*., 1963). Erosion within a non-uniform, non-cohesive layer is checked by dividing its grain size distribution into a fine and a coarse part, each of which is then checked by applying filter criteria. If the filter criteria are satisfied, no material transport will occur, and the ground will be safe against internal erosion.

Clause 10.4(5)P

If the filter criteria cannot be satisfied, the safety against internal erosion can be checked by investigating if the hydraulic gradient causing seepage is high enough to move the soil particles. This check is based on determining the flownet for each case under consideration. In simple cases this can be achieved by plotting a flownet 'by hand', but generally speaking, a numerical simulation must be performed to find out where the hydraulic gradient may become critical and how high its value will become. The computed hydraulic gradient, i_{cal} at crucial points within the ground, for example at the toe of a sheet pile wall or at the ground surface, will then be compared with the critical gradient, i_{crit}, required to transport soil particles within the ground. For internal erosion, Busch and Luckner (1974) established formulae for determining the critical gradient i_{crit} as a function of the grain size distribution of a soil.

Clause 10.4(6)P

For erosion at the interface between two layers, the critical gradient, i_{crit}, is dependent on the direction of the groundwater flow with respect to gravity and the orientation of the layers. The critical hydraulic gradient i_{crit} for nine combinations of fine to coarse soil layers and directions of flow is given in by Armbruster and Tröger (1993).

The filter criteria published in the geotechnical literature will normally incorporate some sort of safety margin, but which, however, is normally unquantified and therefore unknown. In addition, such criteria are often established on the basis of experience with certain regional or local types of soils. Care should therefore be taken when such criteria are used in design, especially when their use is not based on comparable experience.

10.4.2. Effects of material transport

If neither the filter criteria nor the hydraulic criteria can be satisfied, it is likely that material transport will take place. A method for estimating the quantities of fine soil particles transported by groundwater seepage is given by Busch and Luckner (1974). According to their empirical research, a material transport of 3% of the soil will not be critical. If, for example, the serviceability of a structure or the stability of a dam is jeopardized by internal erosion, either different materials should be used for the dam or else structural measures should be taken to prevent the seepage causing internal erosion.

10.5. Failure by piping

10.5.1. General

Clause 10.5(1)P Failure by piping is a particular form of failure by internal erosion where transport of soil material begins at the ground surface, and erosion then regresses until a pipe-shaped discharge tunnel is formed in the soil mass or between the soil and a foundation, or at the interface between cohesive and non-cohesive soil strata. Failure occurs as soon as the upstream end of the eroded tunnel reaches the bottom of the reservoir. A typical situation where piping may occur is illustrated in Fig. 10.5. Here, piping may start in the ditch behind a dam, where the impermeable top layer will crack due to failure by hydraulic heave caused by the high water pressure in the subsoil during a flood. The crack will develop into a well with a high hydraulic gradient, where seepage forces will transport soil particles from the subsoil into the ditch. Protected by the cohesive top layer, a pipe is formed by the continual transport of soil. As the pipe develops upstream, the hydraulic gradient in the subsoil increases, thus accelerating the piping process.

10.5.2. Design against failure by piping

Most of the procedures to asses the danger of piping due to water percolating below a dam or a structure are based on global or weighted hydraulic gradients assuming homogeneous ground (see Bligh, 1910; Lane, 1935). The effects of the presence of different strata cannot be taken into account. Moreover, most failures due to piping are caused by heterogeneities at the interface between the ground and the structure. Therefore, the procedures referred to above should only be used to provide an initial rough assessment.

As there is no direct procedure for checking that there is sufficient resistance against piping, Armbruster *et al*. (1999) have proposed an indirect procedure. The basis of this procedure is a sequence of investigations to check that water seepage cannot transport soil or soil particles from the ground to the ground surface. If this can be checked, then the structure and the ground will be safe against piping, although transport of soil particles may occur within the soil mass. This may produce settlements that could have an adverse effect

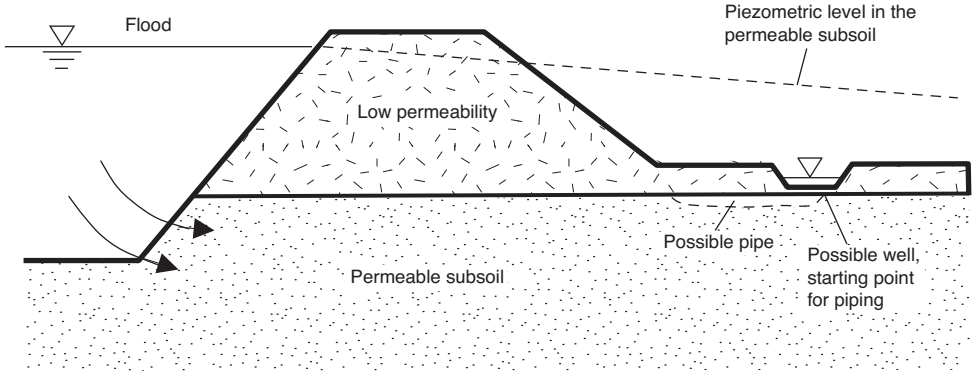

Fig.10.5. Piping below an impermeable dam and top layer

on the serviceability, but a disastrous collapse due to piping will be avoided as long as there is no transport of soil particles out of the ground.

Two checks are necessary to provide sufficient safety against failure by piping:

- Where the ground surface is horizontal, it should be checked if, even under the most unfavourable hydraulic conditions, there is sufficient safety against hydraulic heave (see Section 10.3 of this guide); where the ground surface is inclined, it should be checked if the slope has an adequate level of stability, taking into account the seepage force in the slope (see Chapter 11). *Clause 10.5(4)*
- Furthermore, it should then be checked if the top layer at the ground surface has a sufficient level of safety against internal erosion (see Section 10.4 of this guide). Since soil will be loosened by internal erosion, this should be prevented, as loose soil can facilitate the process of piping. *Clause 10.4(1)P*

The flownet or the distribution of the hydraulic gradient in the ground has to be determined for both checks. The flownet is not only influenced by the permeability of the ground and its possible anisotropy but also by the geometry of a structure, its three-dimensional effects and by the way it was built. Interfaces between the ground and the structure are very often preferred seepage paths along which the water can percolate without resistance, and the hydraulic gradient will therefore drop to zero in these places. Interfaces should therefore be investigated carefully to determine if they are preferred flow paths and are likely to lead to piping before determining the flownet.

When checking safety against piping, the following stages should be performed:

- In the first stage, it is necessary to assess where preferred flow paths either already exist or may develop due to distinctive features of the ground, the geometry of the structure or the way it was built. These areas or interfaces should be modelled by layers of high permeability. It is also necessary to assess whether drainage systems and sealings will perform properly or not.
- In the second stage, the flownet is determined, taking into account the hydraulic assumptions and the boundary conditions assessed in the first stage. Preferably a finite-element analysis is performed for layered ground conditions with different permeabilities or where the three-dimensional effects of a structure have to be taken into account. It may be necessary to perform several analyses in order to determine the most unfavourable flow conditions in the ground or near the structure.
- In the third stage, those areas where the water comes to the ground surface have to be investigated. In the case of slopes, the force of the seeping groundwater must be taken into account when checking overall stability and local stability. If necessary, safety can be increased by adding drainage layers or by flattening the slope. If the ground surface is horizontal, the resistance to failure by hydraulic heave should be checked. In such cases, safety can also be increased by adding drainage layers at the surface or by using prescriptive measures to increase the length of the seepage path.
- In the final stage, the susceptibility of the ground, and in particular the susceptibility of the top layer, to internal erosion should be checked. If the ground does not satisfy the filter criteria, it must be replaced or covered by a drainage layer.

CHAPTER 11

Overall stability

This chapter is concerned with the overall stability of natural slopes, embankments, excavations and retained ground, and with ground movement around foundations on sloping ground and near excavations or coasts. The material is covered in *Section 11* of EN 1997-1. The structure of the chapter follows that of *Section 11*:

Example 11.1 applies the provisions of EN 1997-1 in checking the avoidance of instability of a cutting in stiff clay.

11.1. General

In addition to the provisions of *Section 11*, overall stability issues are also discussed in *Sections 6–10* and *12*, which refer to specific structures. *Clause 11.1.(2)*

11.2. Limit states

Checking against overall stability failure should include all possible limit states. Typically, these include:

(1) Ultimate limit states (ULSs):
  (a) GEO-type limit states, where failure occurs in the ground only, such as failure of a natural slope or a road embankment on soft clay.
  (b) STR-type limit states, with combined failure or large movement in the ground and in certain structural members, such as failure of a deep excavation supported by an anchored sheet pile wall, where the failure surface cuts through the anchors (or, rarely, the sheet pile).

(2) Serviceability limit states (SLSs), such as excessive movements in the ground (e.g. in a natural or artificial slope), due to shear deformations and settlements (e.g. in retained ground next to a deep excavation), vibration (e.g. ground densification due to the operation of vibrating machinery) or heave in the supported structure (e.g. in swelling clays). The term 'excessive movements' includes movements causing loss of serviceability or damage in neighbouring structures, roads or utilities.

The methods for analysing overall stability failure in ULSs and SLSs are discussed below, in Sections 11.5 and 11.6 respectively.

11.3. Actions and design situations

A list of possible actions and situations in geotechnical design is given in *clause 2.4.2.4*(*P*).

Clause 11.3(2)P *Clause 11.3*(*2*)*P* provides some additional design considerations, mainly applicable in overall stability considerations. In addition to the above, future excavations that may trigger a global instability should be taken into account.

In checking ULSs, the most unfavourable loading, hydraulic and material parameter conditions that could occur in the relevant design situation should be considered. In checking SLSs, less severe conditions may be used, as appropriate.

11.4. Design and construction considerations

Overall stability should be checked during the design by calculations, taking into account comparable experience according to *clause 1.5.2.2* of EN 1997-1. If checking indicates instability or unacceptable movements, the site should be judged to be unsuitable without stabilizing measures. In cases where overall stability is not certain, additional investigations, monitoring and analysis should be specified, according to the provisions of *clause 11.7*.

Clause 11.7

11.5. Ultimate limit state design

Clause 11.5.1(1)P The overall stability of slopes (including any existing or planned future structures on them) must be checked in all relevant ULSs (GEO and STR) with design values of actions, material parameters and resistances. The partial factors should be selected from *Tables A.3*, *A.4* and *A.14* of EN 1997-1 (*Annex A*). The same provisions are also applicable to slopes and cuts in rock masses and for excavations.

Clause 11.5.2
Clause 11.5.3

Clause 11.5.1(4) Overall ULS stability checking is usually performed by one of the following calculation methods:

(1) 'Assumed failure surface' methods. These methods are usually implemented numerically via 'methods of slices' (mainly in soil materials) or wedge-type methods (mainly in rock or rock-like materials). Assumed failure surface methods are the most common methods for overall stability checking.
(2) Limit analysis methods. These methods give approximate lower- or upper-bound solutions, i.e. solutions where the occurrence of instability is estimated conservatively or unconservatively, respectively. Available closed-form solutions are limited to simple geometrical situations such as vertical cuts and infinite slopes.
(3) Advanced numerical methods (e.g. finite elements). These methods are more versatile in checking overall stability compared with the 'assumed failure surface' and limit analysis methods. They are most appropriate in cases where instability includes combined failure of structural members and the ground, such as failure surfaces intersecting flexible walls, piles, ground anchorages or nails. In such cases, ground–structure interaction should be considered by allowing for the difference in their relative stiffness. Such effects are investigated more accurately with numerical methods including deformation analysis rather than simplified analyses of ULSs. Advanced numerical models can also permit the mobilization of different fractions of the strength of the ground and of the structural member for a specific movement. Effectively, this means that the peak soil strength and the peak resistance in the structural member need not be assumed to occur simultaneously.

Clause 11.5.1(11)P

'Assumed failure surface' and limit analysis methods are simplified methods which do not satisfy stress equilibrium and strain compatibility conditions simultaneously, but give priority to the failure criterion (usually Mohr–Coulomb). Advanced numerical methods (e.g. classical finite-element methods) satisfy both of these conditions globally (though not necessarily at all points), but they are more complicated to use.

In 'assumed failure surface' methods, the location of a potential failure surface is assumed, and the mass of ground bounded by this surface is treated as a rigid body or as several rigid bodies moving simultaneously. Failure surfaces and interfaces between rigid bodies may have a variety of shapes including planar, circular or more complicated shapes. The shape of the assumed failure surface may be selected using the following recommendations:

Clauses 11.5.1(5) to 11.5.1(9)

- In relatively homogeneous and isotropic soil materials, circular failure surfaces are normally used.
- In layered or anisotropic soils with considerable variations of strength, failure surfaces normally follow layers or directions with lower shear strength.
- In jointed rocks or intensely fissured stiff soils the shape of the failure surface is usually governed by the discontinuities. In such cases, three-dimensional wedge-type failure surfaces are normally assumed. The stability of slopes and cuts in rock masses should also be checked against translational and rotational modes of failure involving isolated rock blocks or large portions of the rock mass, and also against rockfalls, toppling and sliding. Particular attention should be given to the hydraulic pressure caused by confined seepage water in joints and fissures.
- In slopes with pre-existing failure surfaces which may be reactivated, the assumed failure surface should follow as closely as possible the geometry of the pre-existing failure surface, which may be non-circular. If the failure surface deviates significantly from plane-strain geometry, analysis of a three-dimensional failure surface may be required.

In 'assumed failure surface' methods, stability is usually examined by dividing the sliding mass into a number of vertical slices and checking the equilibrium of each slice separately. Various assumptions are made about the direction of the inter-slice forces, leading to various numerical models (e.g. Fellenius, Bishop, Spencer and Morgenstern–Price,). *Clause 11.5.1(10)* recommends that when horizontal equilibrium is not checked, inter-slice forces should be assumed to be horizontal (the Bishop method).

Clause 11.5.1(10)

Using any of the above methods, overall stability checking may be performed according to the following calculation sequence:

(1) The geometrical model is established including external loading, ground layering and hydraulic conditions.
(2) Undrained or drained stability analysis is selected according to the soil mechanics principles, depending on the geometry, the ground type and the expected life of the structure compared with the time required for drainage of the ground. Typically, undrained analyses are critical in cases involving loading of soft clays (e.g. construction of an embankment, or construction on top of a natural slope), while drained analyses are critical in cases involving unloading of stiff clays (e.g. in deep excavations). In cases where the most critical analysis is not obvious, both undrained and drained analyses should be performed.

    Undrained stability may be checked using effective-stress or total-stress conditions. If piezometric data are sparse or unreliable, total-stress conditions with an appropriate initial undrained shear strength (c_u) of the ground are recommended. Effective-stress conditions with appropriate effective shear strength parameters (c', φ') may also be used if reliable piezometric data are available.

    Drained stability analyses should always be performed with effective stress conditions and steady state piezometric levels.
(3) Appropriate characteristic values of ground strength parameters are selected.

In cases of 'first-time failure', shear strength parameters should be selected, considering ground deformation compatibility along the failure surface. This is especially important in cases where the failure surface crosses materials with an appreciable contrast in stiffness and strength (e.g. a soft clay and a dense sand). In simple cases involving relatively uniform soils, it may normally be appropriate to use the peak strength parameters or, in some cases, somewhat lower values such as those corresponding to the post-rupture shear strength (the post-peak plateau of the stress–strain curve), but higher than the residual values corresponding to large relative slip along the failure plane.

When re-activation of a pre-existing failure surface is examined, residual shear strength (or a value somewhat higher than that) may normally be more appropriate. In such cases, shear strength parameters should preferably be selected by back-analysis.

Clause 11.5.1(12)

Clause 11.5.1(*12*) recommends that, since a distinction between favourable and unfavourable gravity loads is not possible in assessing the most adverse slip surface, any uncertainty about ground weight density should be considered by applying upper and lower characteristic values, in separate calculations.

(4) One of the three Design Approaches described in Chapter 2 of this guide and in *Annex B* of EN 1997-1 is adopted, in accordance with the National Annex applying in the country in which the structure is located.

Although not explicitly stated in EN 1997-1, in Design Approach 1 (DA-1), combination 2 is normally the recommended method for overall stability checking in problems where ground is the main element providing resistance (i.e. in mainly GEO-type limit states); in such cases, Combination 1 is not relevant.

Treatment of permanent actions due to gravity loads and water is often difficult in Design Approach 2 (DA-2) (and in DA-1 Combination 1 if relevant), since these loads are usually unfavourable (i.e. they contribute to a positive driving moment) in part of the sliding mass but favourable (i.e. they contribute to a negative driving moment) in another part. As the limit between the two parts varies with the location of the point about which moment equilibrium is checked, it is often difficult to assess the appropriate partial factors for such permanent actions. Finally, note that the partial factors on actions due to gravity loads and water are not the same as the partial factors on weight densities, γ_γ (which are equal to unity – see *Table A.4* in *Annex A* of EN 1997-1).

The authors recommend the following procedure for the selection of partial factors for actions in DA-2 (and in DA-1 Combination 1, if relevant):

(a) Partial factors for all permanent actions (favourable and unfavourable), both structural and geotechnical, including gravity loads due to ground and water, are set equal to unity (instead of $\gamma_G = 1.35$ as recommended in *Table A.3* of EN 1997-1 for the unfavourable actions).
(b) The partial factor for variable unfavourable actions (e.g. traffic loads on the crest of a slope) is set equal to $\gamma_Q = 1.50/1.35 = 1.11$ (instead of 1.5 as recommended in *Table A.3*). The partial factor for variable favourable actions is set equal to zero, as usual (see *Table A.3*).
(c) The missing partial factor ($\gamma_G = 1.35$) is accounted for at the end of the calculations, as described in items 5 and 6 below.

In DA-1 Combination 2 and DA-3, partial factors on geotechnical actions are obtained from set *A2* of *Table A.3*, as usual.

Clause 11.5.1(8)

Partial factors for ground strength parameters are selected from *Table A.4* of EN 1997-1. *Clause 11.5.1*(*8*) mentions that, in cases where slopes with pre-existing failure surfaces are analysed for potential re-activation of the instability, partial factors normally used for overall stability analyses may not be appropriate. The meaning of this clause is that:

(a) Unit values of all partial factors ($\gamma_F = \gamma_M = \gamma_{Re} = 1$) should be used in the determination of ground strength parameters along pre-existing failure surfaces by

back-analysis, since a ULS is assumed, and the objective is to determine the actual mean value of the mobilized shear strength along the 'known' failure surface.

(b) The level of confidence in shear strength parameters determined by such back-analyses is higher than usual (e.g. compared with the usual cases where shear strength parameters are determined from laboratory or field tests), since the volume of ground involved is appreciably larger. Thus, lower values of the partial factors for ground strength parameters (γ_M), compared with those given in *Annex A* of EN 1997-1, may be appropriate in subsequent checks of potential re-activation of the slope instability, after taking stabilizing measures (e.g. after water table draw-down).

(5) Overall stability is checked according to the adopted Design Approach and the appropriate partial factors for actions and ground strength parameters, using any of the above calculation methods ('assumed failure surface', limit analysis or advanced numerical methods).

If the effects of actions driving instability and the corresponding resistances are calculated separately, overall stability is checked using *expression* (*2.5*) of EN 1997-1 ($E_d \leq R_d$), where E_d is the design value of the effects of actions driving instability (e.g. the overturning moment of the sliding mass), and R_d is the design value of the corresponding resistance (e.g. the moment of the appropriate shearing resistance along the assumed failure surface). In DA-2 (and in DA-1 Combination 1, if relevant), it is required to account for the missing partial factor of permanent unfavourable actions ($\gamma_G = 1.35$ – see item 4 above) by the modified expression: $\gamma_G E \leq R_d$, where E is the value of the effect of the actions calculated with the partial factors for actions as recommended in item 4 above.

(6) Many of the present-day computer codes do not provide separately the values of the effect of actions driving instability (E) and the corresponding resistance (R) but instead provide only their ratio (factor $F \equiv R/E$), which is the 'overall factor of safety'. In such cases, overall stability can be checked by the following procedure, using the 'overall factor of safety' (F) and an auxiliary factor, called the over-design factor (ODF), defined below.

In 'assumed failure surface' and limit analysis methods, the factor F is provided directly (as the overall factor of safety) by an analysis with actions and ground strength parameters factored as discussed in item 4 above. The ODF is then calculated in terms of F, as described in paragraphs I(f) and II(f) below.

In advanced numerical methods (e.g. the finite element method), the factor F and the ODF are normally calculated using the 'strength reduction' (or φ-c reduction) procedure described below:

I. Method for DA-1 Combination 1, DA-2, and for the application of DA-1 Combination 2 and DA-3 when ground parameters are factored (by the partial factors γ_M) at the beginning of the calculations:

(a) At each construction stage where overall stability is checked, the numerical model is analysed using the appropriate design values of the ground strength parameters (c'_d, φ'_d). The displacement (D_d) of a 'control point' is selected as the control value. Such a 'control point' can be the centre of the crest of an embankment, the edge of the crest of a slope or a retaining wall, the centre of the footing of a structure, etc.

(b) The ground strength parameters are reduced (or increased, occasionally) by applying a factor $f > 1$ (or $f < 1$, occasionally):

$$c'_{dF} = c'_d/f \qquad \varphi'_{dF} = \arctan(\tan\varphi'_d/f)$$

(c) The model is re-analysed using the new values of the ground strength parameters (c'_{dF}, φ'_{dF}) and the new displacement (D_{dF}) is calculated.

(d) The procedure is repeated for several values of 'f', until the calculated displacement (D_{dF}) becomes appreciably large.

(e) The calculated values of (D_{dF}) are plotted against 'f'. The required factor F is the value of 'f' (i.e. $F = f$) at the point along the curve where the calculated displacement (D_{dF}) starts to increase rapidly, indicating that failure is imminent.

(f) The ODF is obtained from the equation

$$\text{ODF} = F/\gamma_G\gamma_{Re}$$

where:

- γ_G is the partial factor for permanent unfavourable actions given in *Table A.3* of EN 1997-1. The recommended values of this factor are $\gamma_G = 1.35$ in DA-2 and DA-1 Combination 1, and $\gamma_G = 1.00$ in DA-1 Combination 2 and DA-3.
- γ_{Re} is the partial resistance factor for slopes and overall stability given in *Table A.14* of EN 1997-1. The recommended values of this factor are $\gamma_{Re} = 1.00$ in DA-1 and DA-3, and $\gamma_{Re} = 1.10$ in DA-2.

The division of F by the partial factors $\gamma_{G,}$ and γ_{Re} is required because these factors were not used in the calculation of F. Specifically, the division of F by $\gamma_G = 1.35$ in DA-2 and DA-1 Combination 1 aims to account for the 'missing' partial factor of unfavourable permanent actions (see item 4, above).

Based on the values of γ_G and γ_{Re} recommended in *Annex A* of EN 1997-1, the ODF is related to the factor F as follows:

In DA-2: ODF = $F/(1.35 \times 1.10) \Rightarrow$ ODF = $F/1.485$
In DA-3 and DA-1 Combination 2: ODF = F
In DA-1 Combination 1 (when applicable): ODF = $F/1.35$.

II. Method for the application of DA-1 Combination 2 and DA-3 when calculations are performed using the characteristic values of ground parameters, with partial factors (γ_M) applied at the end:

(a) At each construction stage where overall stability is checked, the numerical model is analysed using the characteristic values of the ground strength parameters (c'_k, φ'_k). The displacement (D_k) of a 'control point' is selected as the control value. Such a 'control point' can be the centre of the crest of an embankment, the edge of the crest of a slope or a retaining wall, the centre of the footing of a structure, etc.

(b) The ground strength parameters are reduced by applying a factor $f > 1$:

$$c'_{kF} = c'_k/f \qquad \varphi'_{kF} = \arctan(\tan(\varphi'_k/f)$$

(c) The model is re-analysed using the new values of the ground strength parameters (c'_{kF}, φ'_{kF}), and the new displacement (D_{kF}) is calculated.

(d) The procedure is repeated for several values of 'f', until the calculated displacement (D_{kF}) becomes appreciably large.

(e) The calculated values of D_{kF} are plotted against 'f'. The factor F is obtained from the equation $F = f/\gamma_M$, where γ_M is the partial factor for the ground strength parameters and 'f' is the value at the point along the curve where the calculated displacement (D_{kF}) starts to increase rapidly, indicating that failure is imminent. The reason for dividing by γ_M is that the factor F aims to provide the margin of safety beyond that provided by the design values of the shear strength parameters.

(f) The ODF is calculated by the equation ODF = F.

The above two methods (I and II) of the 'strength reduction' procedure do not provide exactly the same value of the ODF if the stress–strain relationship of the ground (used in the numerical model) is stress-path dependent and the construction sequence involves non-linear stress paths (e.g. if undrained loading is followed by consolidation or if loading is followed by unloading).

In all the above methods, a value of the ODF equal to unity indicates that overall stability is exactly adequate, i.e. the available margin of safety is exactly that required by EN 1997-1. An ODF > 1 indicates that the available margin of safety is more than adequate by EN 1997-1, while an ODF < 1 implies that safety is inadequate (but the structure may not necessarily fail, since there may still exist some margin of safety which is considered inadequate by EN 1997-1). In fact, the requirement ODF ≥ 1 is equivalent to the overall stability requirement of EN 1997-1 ($E_d \leq R_d$, *expression* (*2.5*)), because:

(a) In DA-1 Combination 1 and DA-2:

$$\gamma_G E_k \leq R_k/\gamma_{Re} \Rightarrow (R_k/E_k)/\gamma_G\gamma_{Re} \geq 1 \Rightarrow F/\gamma_G\gamma_{Re} \equiv \text{ODF} \geq 1$$

(b) In DA-1 Combination 2 and DA-3:

$$R_d/E_d \geq 1 \Rightarrow F \geq 1 \Rightarrow F/(1 \times 1) \geq 1 \Rightarrow F/\gamma_G\gamma_{Re} \equiv \text{ODF} \geq 1$$

Comparisons with the OFS in conventional design:

On the basis of the above arguments, and with the values of the partial factors recommended in *Annex A* of EN 1997-1, checking overall stability according to the three Design Approaches in Eurocode 7 – Part 1 (i.e. the requirement $E_d \leq R_d$ or, equivalently, ODF = 1) corresponds to the following values of the OFS in conventional design, at least in cases involving circular failure surfaces and no variable loads:

- DA-1 Combination 2 and DA-3:

  OFS = γ_M = 1.25 (effective stress stability analysis)

  OFS = γ_M = 1.40 (total stress stability analysis)
- DA-1 Combination 1 (if applicable):

  OFS = γ_G = 1.35
- DA-2:

  OFS = $\gamma_G\ \gamma_{Re}$ = 1.35 × 1.10 = 1.485

The above conclusions indicate that, with the values of the partial factors recommended in *Annex A* of EN 1997-1, DA-2 is the most conservative, while DA-1 and DA-3 give identical results in typical problems. Equivalence between the three Design Approaches may be achieved either by changing the value of the partial resistance factor (γ_{Re}) for slopes and overall stability in *Table A.3* of EN 1997-1, or by introducing a 'model factor' (according to the principles of EN 1990). For example, if the partial resistance factor for slopes and overall stability in DA-2 is changed to γ_{Re} = 1.0, the equivalent value of the overall factor of safety will be reduced to OFS = 1.35.

Example 11.1 checks the overall instability of a cutting in stiff clay using the 'assumed failure surface' method.

11.6. Serviceability limit state design

SLS design should demonstrate that ground deformations, under design actions and design ground material parameters with partial factors equal to unity, will not exceed the serviceability requirements for the structures and infrastructure on, or near, the particular ground. *Clause 11.6(1)P*

Estimates of ground deformations may be performed by analytical methods (typically for simple problems) and by numerical methods such as finite elements. In the case of natural slopes, *clause 11.6*(*3*) recommends that, since these methods usually do not provide reliable predictions of the deformation, the occurrence of SLSs should be avoided either by limiting the mobilized shear strength or by monitoring ground movements and specifying procedures to reduce or prevent them, if necessary. *Clause 11.6(3)*

11.7. Monitoring

Clause 11.7

Clause 11.7 lists the conditions under which monitoring is required and the objectives of a monitoring system in relation to overall stability requirements.

Example 11.1: overall stability of a cutting in stiff clay

This example checks the overall stability of a cutting in stiff, over-consolidated clay (Fig. 11.1), of height $H = 10$ m and slope inclination 1:2 (slope angle $\beta = 26.6°$ with respect to the horizontal). A building exerting a uniform pressure with the characteristic value $g_k = 35$ kPa (permanent unfavourable action) is located at a distance of 2 m from the edge of the slope. The initial permanent groundwater table was located at a depth $d = 3$ m below the original ground surface (before the excavation was made). It is assumed that, due to the excavation, the water table is gradually lowered and eventually reaches the configuration shown in Fig. 11.1.

As unloading of the stiff over-consolidated clay is the dominant design situation failure mode in this case, drained stability failure is most critical. Thus, the stability analysis is performed using effective-stress ground strength parameters (c', φ'), in conjunction with steady state piezometric levels corresponding to the water table shown in Fig. 11.1. Since a 'first-time' stability failure is investigated, ground strength parameters somewhat lower than the peak values will be used. The characteristic values of the ground parameters are:

- Saturated weight density: $\gamma_k = 20$ kN/m^3.
- Effective angle of shearing resistance: $\varphi'_k = 28°$.
- Effective cohesion intercept: $c'_k = 10$ kPa.

ULS analysis of the overall stability is performed using the Bishop method of slices. The Bishop method of slices belongs to the 'assumed failure surface' methods, and investigates circular potential failure surfaces. The computer program examines a multitude of circular potential failure surfaces (several thousand in this case), and gives the minimum F value and the corresponding circle.

The stability check is performed for all three Design Approaches of EN 1997-1 and the conventional OFS method.

Although formally required by EN 1997-1, DA-1 Combination 1 is not relevant in this case, because:

(1) structural strengths do not provide resistance against overall stability failure
(2) failure is controlled by uncertainty in the ground strength rather than uncertainty in the actions (see Section 11.5 above).

If, however, an analysis is performed according to DA-1 combination 1, then:

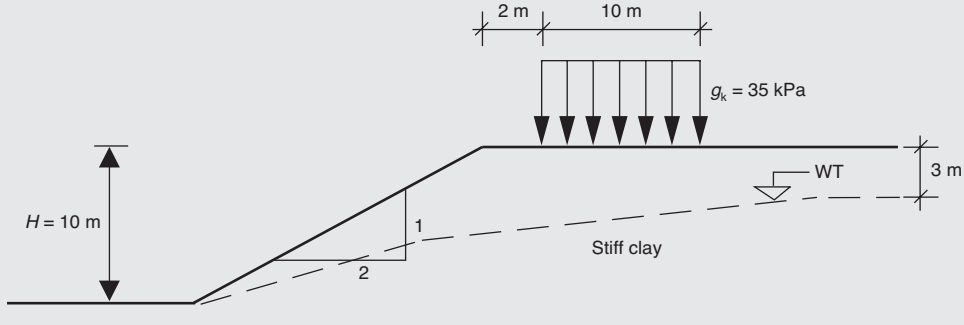

Fig. 11.1. Geometrical data of a cutting in stiff clay

Table 11.1. Characteristic and design values of actions and ground strength parameters

	DA-1 Combination 2[a]	DA-2	DA-3	OFS method
Characteristic value of ground weight density (kN/m^3)	20	20	20	20
Characteristic value of weight of water (kN/m^3)	10	10	10	10
Characteristic value of surface surcharge (permanent unfavourable) (kPa)	35	35	35	35
Partial factor for actions				
For surface surcharge (permanent unfavourable), γ_G	**1.00**	**1.00**[b]	**1.00**	**1.00**
For gravity (permanent unfavourable), γ_G	**1.00**	**1.00**[b]	**1.00**	**1.00**
Design value of ground weight density (kN/m^3)	20	20	20	20
Design value of weight density of water (kN/m^3)	10	10	10	10
Design value of surface surcharge, $g_d = \gamma_G g_k$ (kPa)	35	35	35	35
Characteristic value of angle of shearing resistance, φ' (°)	28	28	28	28
Characteristic value of cohesion intercept, c' (kPa)	10	10	10	10
Partial factor for ground strength parameters, γ_M	**1.25**	**1.00**	**1.25**	**1.00**
Design value of angle of shearing resistance, φ' (°)	23	28	23	28
Design value of cohesion intercept, c' (kPa)	8	10	8	10
Partial factor for earth resistance, γ_{Re}	**1.00**	**1.10**	**1.00**	**1.00**

[a] Combination 1 is not relevant in this example
[b] Adjusted factors. See discussion in Section 11.5 (item 4) in this chapter

(1) the design value of the effect of the actions will be calculated by applying the partial factor value **1.35** to the corresponding characteristic value
(2) the design value of the shearing resistance along the failure surface will be calculated by applying a partial material factor, equal to **1.0**, to the corresponding characteristic value.

SLS analysis of the cutting is not performed, for simplicity. Such analysis would require the determination of ground deformations due to the excavation and an assessment of their effects on the building located at the top of the slope, using numerical methods (e.g. finite elements).

Partial factors for actions are obtained using the recommendations in Section 11.5. The characteristic and design values of actions and ground strength parameters are summarized in Table 11.1.

Figure 11.2 shows the critical failure surface and the minimum F value calculated for DA-2. The ODF is

$$\text{ODF} = F/\gamma_G\gamma_{Re} = 1.494/(\mathbf{1.35} \times \mathbf{1.1}) = 1.006 \approx 1.00$$

i.e. safety against overall stability failure is exactly adequate (the slope is not over-designed).

In this example, the calculations according to the conventional design (OFS method) are identical to those of DA-2, since all partial factors are equal to unity. Note that if variable, unfavourable actions existed (e.g. variable surface loads on the crest of the slope), DA-2 would use a partial factor

$$\gamma_Q = \mathbf{1.50}/\mathbf{1.35} = 1.11$$

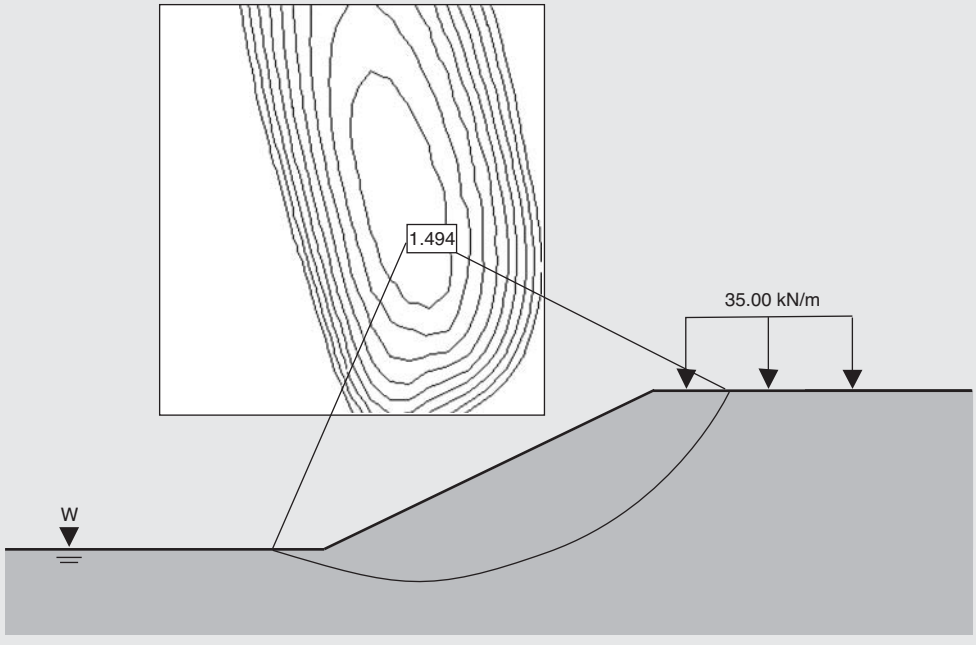

Fig. 11.2. Design Approach 2: the calculated minimum *F* value is 1.494

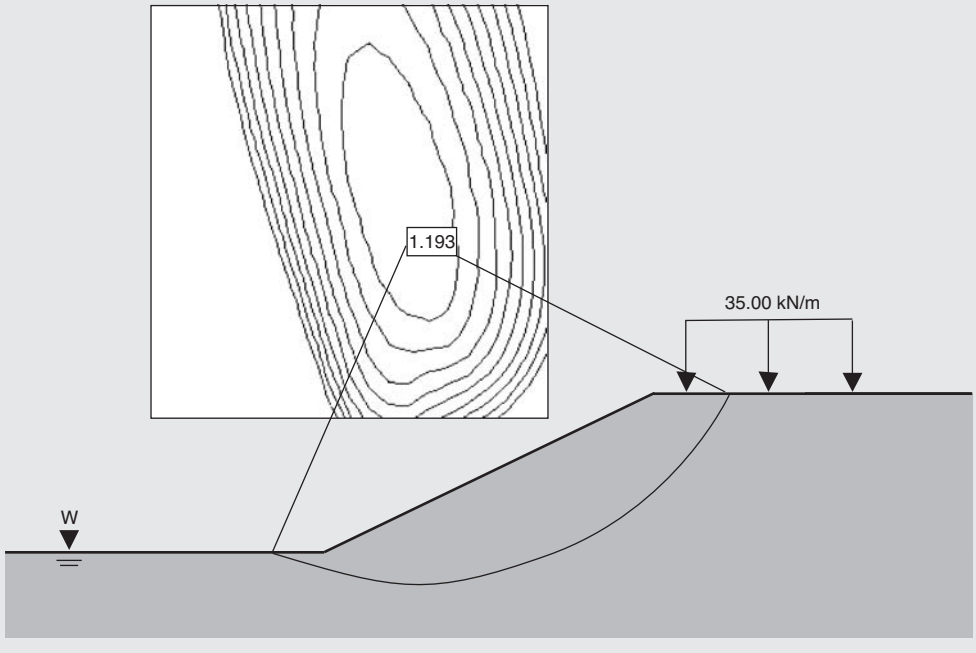

Fig. 11.3. DA-1 Combination 2 and DA-3: the calculated minimum *F* value is 1.193

for those actions, and thus the results of DA-2 and the OFS method would be somewhat different.

Figure 11.3 shows the critical failure surface and the minimum *F* value calculated for DA-1 Combination 2 and for DA-3. As mentioned above, Combination 1 of DA-1 is not relevant in this case. The ODF is

$$\text{ODF} = F/\gamma_G\gamma_{Re} = 1.193/(\mathbf{1.0} \times \mathbf{1.0}) = 1.193 > 1.00$$

Table 11.2. Results of the overall stability calculations

	DA-1 Combination 2	DA-2	DA-3	OFS method
ODF calculated for overall stability	1.193	1.00	1.193	1.00[a]

[a] In the OFS method, the required minimum OFS is assumed equal to $OFS_{min} = 1.50$, although lower values ($OFS_{min} = 1.30–1.40$) are often used in drained analyses. Thus, the equivalent ODF for the conventional design is $ODF = F/OFS_{min} = 1.494/1.50 = 1.00$

i.e. safety against overall stability failure is more than adequate (the slope is over-designed by about 19%).

Table 11.1.2 summarizes the results of the overall stability calculations for all Design Approaches and the OFS method.

The above calculations show that:

(1) DA-1 and DA-3 give identical results, as expected (see the discussion in Section 11.5 above).
(2) For the values of the partial factors recommended in *Annex A* of EN 1997-1, DA-2 is practically equivalent to the conventional OFS method (for $OFS_{min} = 1.50$), and is the most conservative of the Design Approaches in EN 1997-1.

The above conclusions are applicable to all overall stability calculations, i.e. not only in the present example, since they result from the choice of the partial factors for actions and resistances. For example, if the partial resistance factor in DA-2 is changed to $\gamma_{Re} = 1.0$ (instead of 1.1), the ODF will become

$$ODF = F/\gamma_G\gamma_{Re} = 1.494/(\mathbf{1.35} \times \mathbf{1.0}) = 1.11$$

(instead of 1.00) making DA-2 approach the results of DA-1 and DA-3. It is noted that a choice of $\gamma_{Re} = \mathbf{1.0}$ (instead of 1.1) in DA-2 is equivalent to requiring $OFS_{min} = 1.35$ (instead of $1.35 \times 1.1 = 1.485$).

CHAPTER 12

Embankments

This chapter is concerned with the design requirements for embankments for small dams and for infrastructure, such as road and railway embankments. The material is covered in *Section 12* of EN 1997-1. The structure of this chapter follows that of *Section 12*:

The design requirements for embankments are closely related to the construction of fill and to overall stability. A general reference is therefore made to *Section 5*, on fill, dewatering, ground improvement and reinforcement, and to *Section 11*, on overall stability.

For readers familiar with the ENV version of Eurocode 7 – Part 1 it may be noted that that version contained a section on embankments and slopes (*Section 9*). During the enquiry period for the ENV version it became evident that combining embankments and slopes in one section was inappropriate. For the present EN version of Eurocode 7 – Part 1 it was therefore decided to divide the two items into two separate sections and to rename the section on slopes to '*Overall stability*'.

12.1. General

Section 12 applies to embankments for small dams and for infrastructure. No definition, however, is given in EN 1997-1 for the word 'small'. Since Eurocode 7 – Part 1 is aimed mainly at the design of Geotechnical Category 2 structures, it is probably appropriate to assume that 'small dams' include dams (and embankments for infrastructure) up to a height of approximately 10 m. *Clause 12.1(1)P*

12.2. Limit states

The different limit states that should be considered in the design of embankments are given as a checklist in *clause 12.2(2)*. It should be noted that limit states involving adjacent structures, roads and services are included in this list. This concern for the possible adverse influence of the embankment on adjacent structures, roads and services is likewise reflected in the following discussion on clauses of *Section 12* on actions and design situations, on design and construction considerations, and on ultimate and serviceability limit state design. *Clause 12.2(2)*

It should also be noted that, of the 12 limit states listed, three are directly concerned with water:

- failure caused by internal erosion
- failure caused by surface erosion or scour
- deformations caused by hydraulic actions.

However, the presence of water also plays an important role when designing an embankment against loss of overall stability, failure in the embankment slope or crest, and loss of serviceability and creep by climatic influences. The fact that so many limit states for embankments are concerned with water demonstrates the importance of taking all aspects of the presence of water into account in the design of embankments. This concern is also reflected in the clauses of *Section 12* discussed below.

12.3. Actions and design situations

Clauses 12.3(5)P to 12.3(7)P

In *clause 12.3* on actions and design situations, it is again stressed how critically important it is to take the effects of water correctly into account in geotechnical designs. It is also stressed that the most unfavourable groundwater condition within the embankment and free water levels in front of the embankment should be selected when assessing the stability.

12.4. Design and construction considerations

Clause 12.4

Clause 12.4(1)P

Clause 12.4 on design and construction considerations contains a long list of items and options that need to be considered in the design and construction of embankments. It should be noted that the first item listed in this clause is the need to take account of experience with embankments on similar ground and made of similar fill material. This emphasizes the importance of visiting the site of a future embankment and observing and evaluating the stability and conditions of adjacent structures and utilities.

12.5. Ultimate limit state design

Clause 12.5
Clause 12.5(7)P
Clause12.5(1)P

In *clause 12.5*, which is concerned with the ultimate limit state design of embankments, the most important clauses, *clauses 12.5(7)P* and *12.5(1)P*, require that the provisions for preventing hydraulic failure and fulfilling overall stability must be fulfilled. These provisions are contained in *Sections 10* and *11*, and are discussed in Chapters 10 and 11 of this guide.

12.6. Serviceability limit state design

Clause 12.6(1)P

Clause 2.4.8(1)P
Clause 2.4.8(2)

Clause 12.6(1)P states that, in the serviceability limit state design of an embankment, it is necessary to check that the deformation of the embankment does not lead to the occurrence of a serviceability limit state in either the embankment or any adjacent structures, roads or services. It should be noted that the serviceability limit state check is carried out using partial factor values which are normally taken as equal to unity. Thus, in the serviceability limit state design of an embankment, the design values of the actions and material parameters, e.g. stiffness, are normally equal to the characteristic values.

12.7. Supervision and monitoring

Clause 2.7

The design of embankments normally involves many possible combinations of actions – of which water pressures are often the most important – and many possible failure modes and

limit states. Use of the observational method supplementing design calculations is consequently highly recommended for this type of structure. An essential element in the use of this method is the reliance on supervision and monitoring. This is especially important in the selection, placing and compaction of fill for the construction of embankments for small dams and for infrastructure.

Clause 5.3.3

Clause 12.7(*4*) provides a list of items for which it states records *should* be included in a monitoring programme for an embankment. In the authors' view, the word 'should' in this clause is not entirely appropriate; a better wording is 'may contain the following and other records as relevant', since which particular items should be included will depend on the particular design situation.

Clause 12.7(4)

References

Alonso, E. E., Josa, A. and Ledesma, A. (1984) Negative skin friction on piles: a simplified analysis and prediction procedure. *Géotechnique*, **34**, 341–357.

Armbruster, H. and Tröger, I. H. M.(1993) Underground erosion caused by raised water levels of impounded rivers. In: J. Brauns, M. Heibaum and U. Schuler (eds), *Filters in Geotechnical and Hydraulic Design*. Balkema, Rotterdam.

Armbruster, H., Heibaum, M. and Schuppener B. (1999) Principles of the recommendations: stability of dams for waterways. In: *Proceedings of the 12th European Conference on Soil Mechanics and Foundation Engineering*, Amsterdam, Vol. 2.

Baguelin, F., Frank, R. and Jézéquel, J. F. (1982) Parameters for friction piles in marine soils. In: *Proceedings of the 2nd International Conference on Numerical Methods in Offshore Piling*, Austin, pp. 197–214.

Bauduin, C. M. (2001) Design procedure according to Eurocode 7 and analysis of the test results. In: *Proceedings of the Symposium on Screw Piles – Installation and Design in Stiff Clay*, Brussels. Balkema, Rotterdam, pp. 275–303.

Bauduin, C. M. (2002a) Determination of characteristic values. In: U. Smoltczyk (ed.), *Geotechnical Engineering Handbook*. Ernst, Berlin, Vol. I, pp. 17–50.

Bauduin, C. M. (2002b) Design of axially loaded piles according to Eurocode 7. In: *Proceedings of the 9th International Conference on Piling and Deep Foundations (DFI 2002)*, Nice. Presses de l'ENPC, Paris, pp. 301–312.

Bligh, W. G. (1910) Dams, barrages and weirs in porous foundations. *Engineering News*, 64, 708–710.

Brinch Hansen, J. (1956) *Limit Design and Safety Factors in Soil Mechanics*. Danish Geotechnical Institute, Copenhagen, Bulletin No. 1 [in Danish with an English summary].

Burland, J. B., Broms, B. B. and De Mello, V. F. B. (1977) Behaviour of foundations and structures. In: *Proceedings of the 9th International Conference on Soil Mechanics and Foundation Engineering*, Tokyo, Vol. 2, pp. 495–546.

Busch, K.-F. and Luckner, L. (1974) *Geohydraulik*. Enke, Stuttgart.

Caquot, A., Kérisel, J. and Absi, E. (1973) *Tables de Butée et de Poussée*. Gauthier-Villars, Paris.

Cistin, J. (1967) Zum Problem mechanischer Deformationen nichtbindiger Lockergesteine durch die Sickerwasserströmung in Erddämmen. *Wasserwirtschaft*, **2**.

De Cock, F., Legrand, C. and Huybrechts, N. (2003) Axial static pile load test (ASPLT) in compression or in tension – Recommendations from ERTC3 – Piles, ISSMGE Subcommittee. In: *Proceedings of the 13th European Conference on Soil Mechanics and Geothnical Engineering*, Prague, Vol. 3, pp. 717–741.

EAU (1980) *Recommendations of the Committee for Waterfront Structures*. Ernst, Berlin.

EAU (1996) *Recommendations of the Committee for Waterfront Structures*. Ernst, Berlin.

European Commission (2003a) *Guidance Paper L* (*Concerning the Construction Products Directive – 99/106/EEC*). *Application and Use of Eurocodes*, Version 27 November 2003. EC, Brussels.

European Commission (2003b) Commission recommendation of 11 December 2003. Document No. C(2003) 4639. *Official Journal of the European Union*.

Frank, R. (1999) *Calcul des Fondations Superficielles et Profondes*. Presses de l'ENPC et Techniques de l'Ingénieur, Paris.

Frank, R. and Kovarik, J. B. (2005) Comparaison des niveaux de sécurité, calage d'un coefficient de modèle pour la résistance ultime des pieux sous charges axiales. *Revue Française de Géotechnique*, **110** (in press).

Gulvanessian, H., Calgaro, J.-A. and Holický, M. (2002) *Designers' Guide to EN 1990, Eurocode: Basis of Structural Design*. Thomas Telford, London.

Ingold, T.S. (1979) The effects of compaction on retaining walls. *Géotechnique*, **29**, 265–284.

Institution of Structural Engineers (1955) Report on structural safety. *Structural Engineer*, **33**, 141–149.

ISSMGE (1981)*Lexicon in 8 Languages*, 5th edn. Bryant Press, Ontario.

Lane, E. W. (1935) Security from under-seepage masonry dams on earth foundations. *Transactions of the American Society of Civil Engineers*, **100**, S.1233–S.1351.

Lumb, P. (1974) Application of statistics in soil mechanics. In: I. K. Lee (ed.), *Soil Mechanics – New Horizons*. Butterworth, London, Ch. 3.

Mortensen, K. (1983) *Is Limit State Design a Judgement Killer? Sixth Laurits Bjerrum Memorial Lecture, 1982. Publication 148*. Norwegian Geotechnical Institute, Oslo.

Orr, T. L. L. and Farrell, E. R (1999) *Geotechnical Design to Eurocode 7*. Springer-Verlag, London.

Poulos, H. G. and Davis, E. H. (1980) *Pile Foundation Analysis and Design*. Wiley, New York.

Rethati, L. (1988) *Probabilistic Solutions in Geotechnics. Developments in Geotechnical Engineering* 46. Elsevier, Amsterdam.

Schneider, H. R. (1999) Determination of characteristic soil properties. In: *Proceedings of the 12th European Conference on Soil Mechanics and Foundation Engineering*, Amsterdam. Balkema, Rotterdam, Vol. 1, pp. 273–281.

Schuppener, B., Walz, B., Weissenbach, A. and Hock-Berghaus, K. (1998) EC7 – a critical review and a proposal for an improvement: a German perspective. *Ground Engineering*, **31**, 32–35.

Sherard, J. L., Woodward, R. J., Gizienski, S. F. and Clevenger, W. A. (1963) *Earth and Earth–Rock Dams: Engineering Problems of Design and Construction*. Wiley, New York.

Simpson, B. (2000) Partial factors: where to apply them? In: *Proceedings of LSD2000: International Workshop on Limit State Design in Geotechnical Engineering*, Melbourne.

Simpson, B. and Driscoll, R. (1998) *Eurocode 7 – A Commentary*. Construction Research Communications, Watford.

Smoltczyk, U. (1985) Axial pile loading test – part 1: static loading. ISSMFE Subcommittee on Field and Laboratory Testing. *Geotechnical Testing Journal*, **8**, 79–90.

Terzaghi, K. and Peck, R.B. (1967) *Soil Mechanics in Engineering Practice*. Wiley, Chichester.

Van Aalboom, G., and Mengé, P. (1999) The derivation of characteristic values of shear strength parameters according to EC 7. In: *Proceedings of the 12th European Conference on Soil Mechanics and Foundation Engineering*, Amsterdam. Balkema, Rotterdam, Vol. 1, pp. 295–302.

Wastiaux, M., Ducroq, J. and Baguelin, F. (1998) Les fondations maritimes du Pont Vasco de Gama. *Travaux*, **743**, 33–41.

INDEX

Index Terms	Links			

Index Terms	Links		

Index Terms	Links			

H

Index Terms	Links		

I

K

L

M

Index Terms	Links			

R

Index Terms	Links			

S

Index Terms	Links		

Index Terms	Links		

V

W